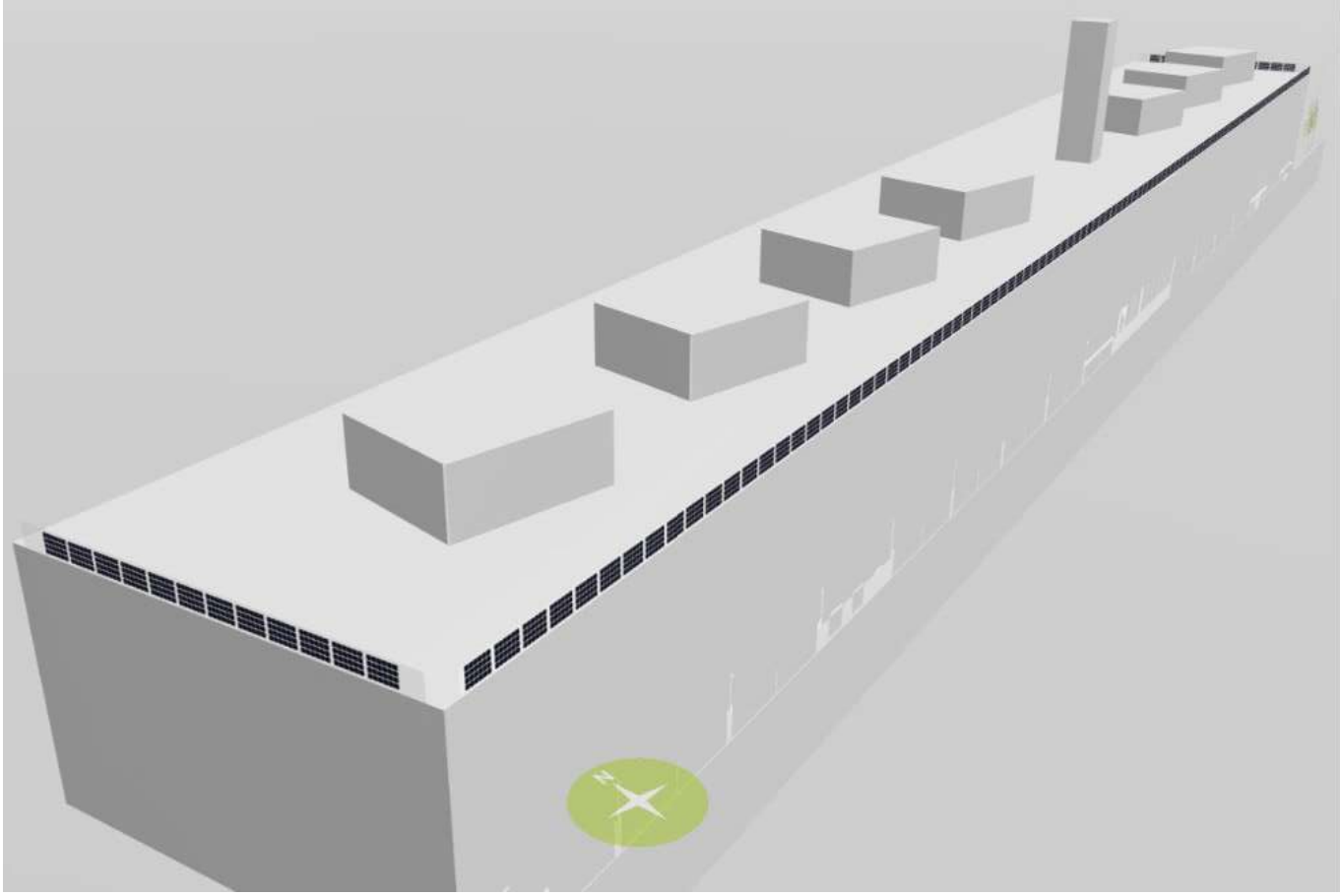

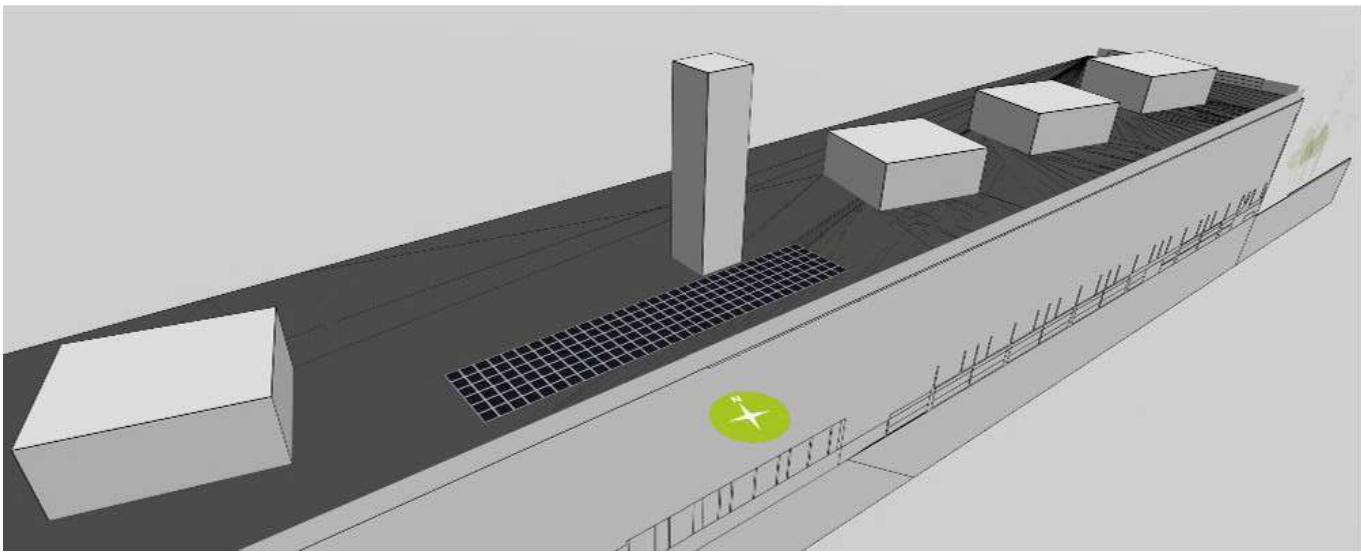

Inicio	Fin	Módulos Serie	Tensión [V]	Intensidad [A]	Longitud [m]	Sección Teórica [mm²]	Sección Real [mm²]
Rama 001 - Barandilla Este	INV01	12	149,64	7,88	100	23,94	25
Rama 002 - Barandilla Oeste	INV01	12	149,64	7,88	46	11,01	16
Rama 003 - Barandilla Sur	INV02	54	679,86	8,07	78	4,21	6
Rama 004 - Barandilla Sur	INV02	54	679,86	8,07	13	0,70	4
Rama 005 - Suelo Técnico	INV03	48	432	5,71	39	2,34	4
Rama 006 - Suelo Técnico	INV03	48	432	5,71	51	3,06	4
Rama 007 - Suelo Técnico	INV03	48	432	5,71	52	3,12	4
Rama 008 - Suelo Técnico	INV03	48	432	5,71	41	2,46	4

Inicio	Fin	Tensión [V]	Potencia [W]	Intensidad [A]	Longitud [m]	Sección Real (mm²)
INV01	CGA_01	230	2000	8,70	15	2x10+TTx10mm²
INV02	CGA_01	400	10000	14,43	15	4x10+TTx10mm²
INV03	CGA_01	400	8000	11,55	15	4x6+TTx6mm²

Photovoltaic glass - General view

FRONT VIEW

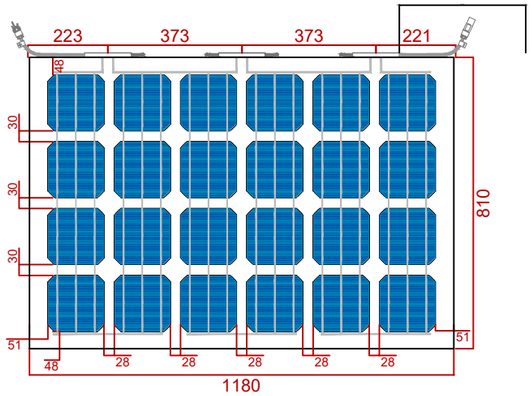

REAR VIEW

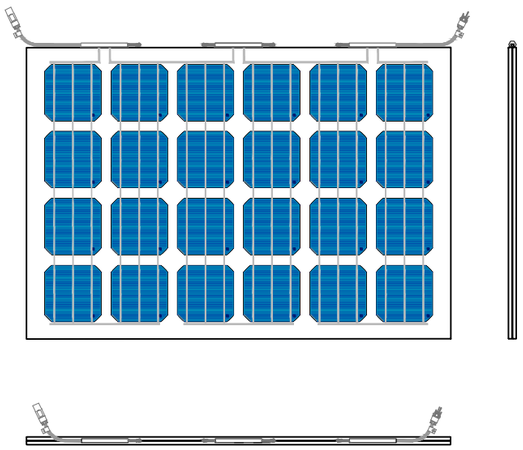

Front & Rear Glass

FRONT VIEW

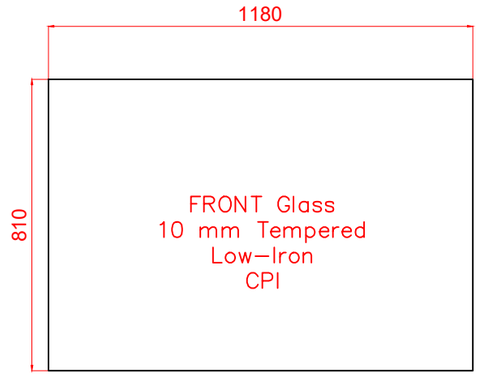

REAR VIEW

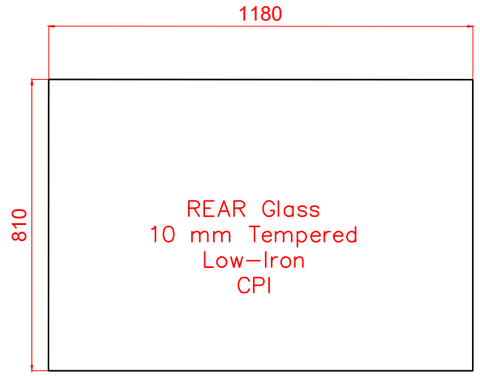

Signed by Customer:

SECTION
dimensions: mm.

DETAIL : Junction Box

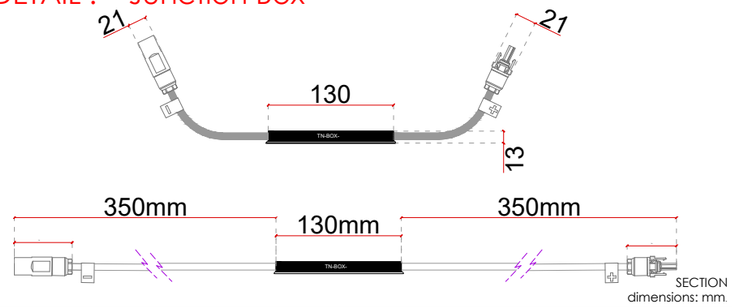

DETAIL 2: Junction box location

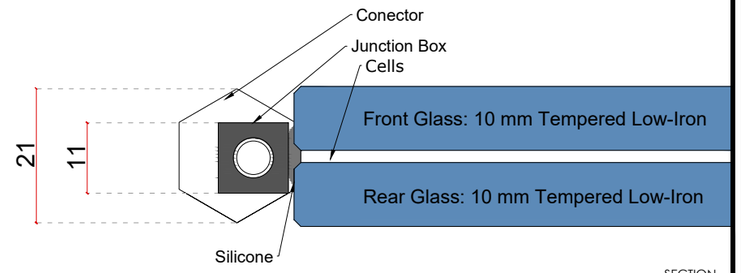

DETAIL 1: Glass configuration

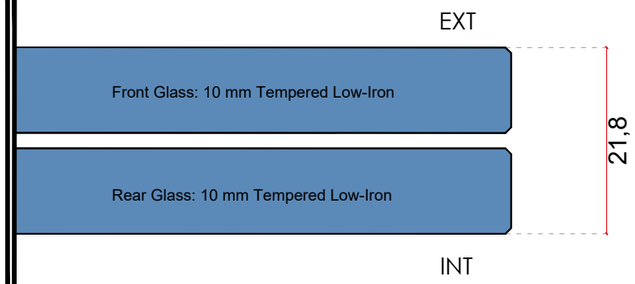

Photovoltaic Glass specifications:

Module Glass-Glass:	**1180x810x21.8mm**
Glass dimension (mm):	**1180x810x10mm.**
Cell Technology:	**Mono-Crystalline silicon Bifacial (3 Bus bar)**
Cell dimension (mm):	**156 x 156mm (6" x 6")**
Number of cells:	**24 (4 strings / 6 cells per string)**
Encapsulant:	**EVA**
Junction box:	**TALEN TN-box (LATERAL)**
Length cables:	**350mm**
Bus bar:	**3 x 0,3 mm**

Cell Type/Dimensions:

bifacial Mono-Crystalline 6"

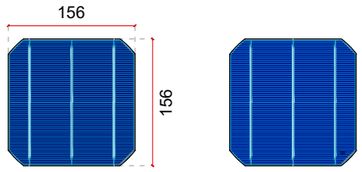

SECTION
dimensions: mm.

PROYECT: **BIPVBOOST_ISFOC_**	CUSTOMER: **BIPVBOOST**	QUANTITY: **108 units + 3 spare**	**nº**
LOCATION:	ONYX DEPARTMENT: **I+D+i_ONYXSOLAR**	DATE: **21/01/2022**	**ISFOC_01**

Photovoltaic glass - General view

FRONT VIEW

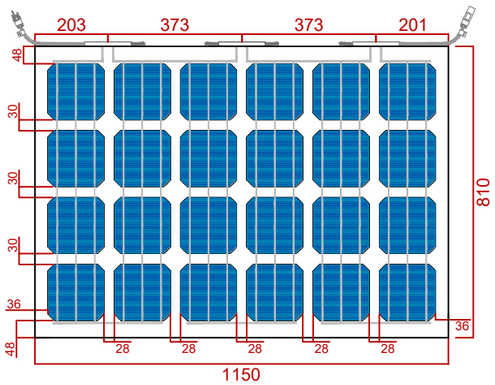

REAR VIEW

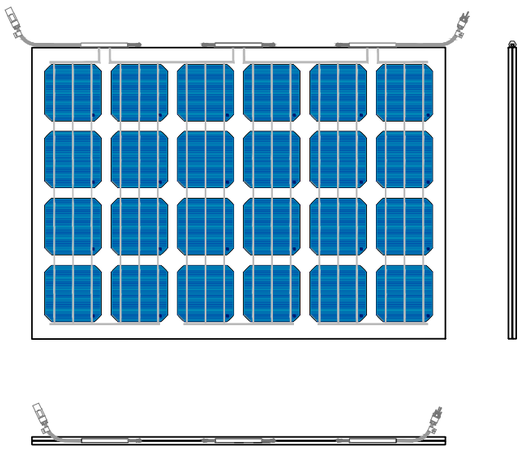

Front & Rear Glass

FRONT VIEW

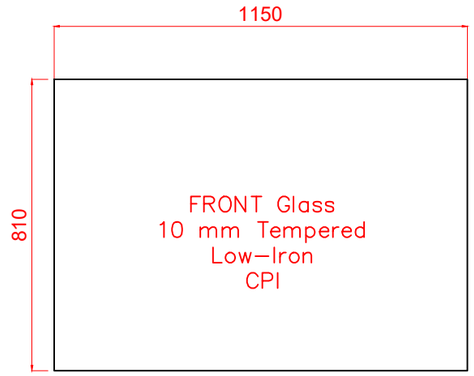

REAR VIEW

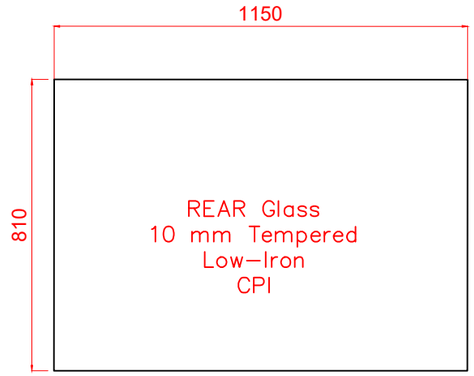

Signed by Customer:

SECTION
dimensions: mm.

DETAIL : Junction Box

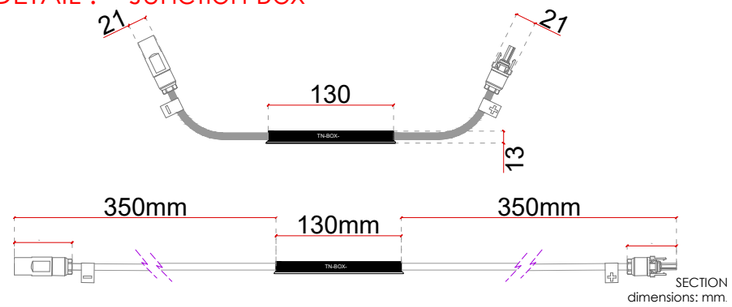

DETAIL 2: Junction box location

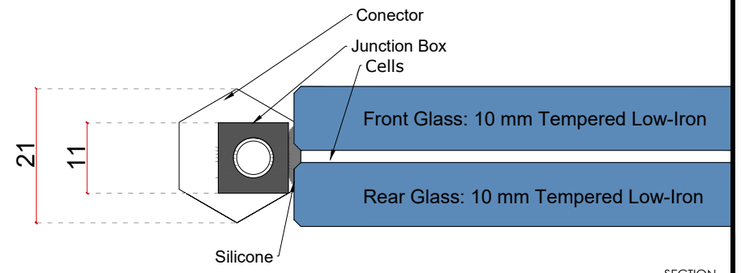

DETAIL 1: Glass configuration

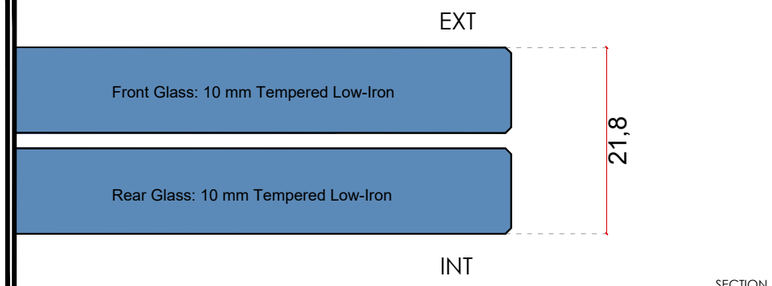

Photovoltaic Glass specifications:

Module Glass-Glass:	**1150x810x21.8mm**
Glass dimension (mm):	**1150x810x10mm.**
Cell Technology:	**Mono-Crystalline silicon Bifacial (3 Bus bar)**
Cell dimension (mm):	**156 x 156mm (6" x 6")**
Number of cells:	**24 (4 strings / 6 cells per string)**
Encapsulant:	**EVA**
Junction box:	**TALEN TN-box (LATERAL)**
Length cables:	**350mm**
Bus bar:	**3 x 0,3 mm**

Cell Type/Dimensions:

bifacial Mono-Crystalline 6"

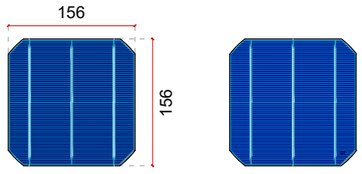

SECTION
dimensions: mm.

PROYECT: **BIPVBOOST_ISFOC_**	CUSTOMER: **BIPVBOOST**	QUANTITY: **24 units + 2 spare**	**nº**
LOCATION:	ONYX DEPARTMENT: **I+D+i_ONYXSOLAR**	DATE: **21/01/2022**	**ISFOC_02**

Photovoltaic glass - General view

FRONT VIEW

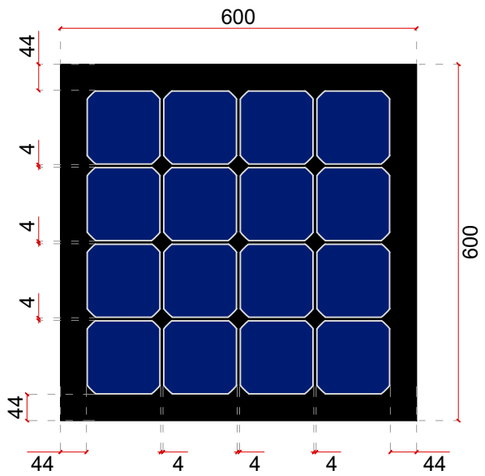

FRONT VIEW

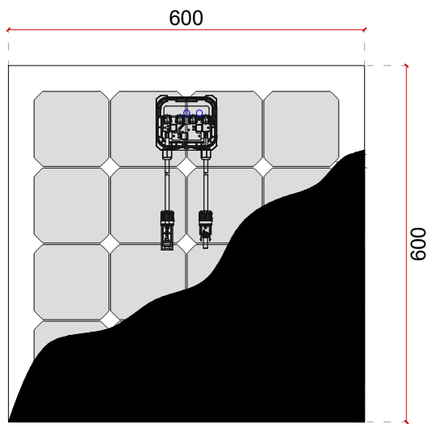

Front & Rear Glass

FRONT VIEW

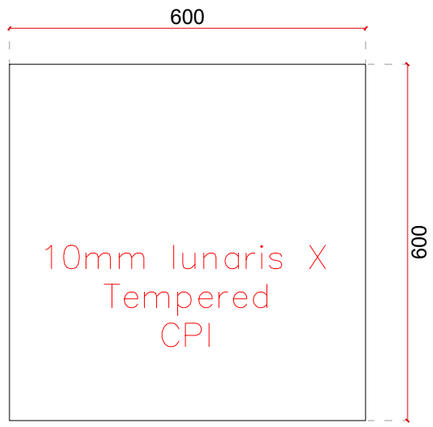

FRONT VIEW

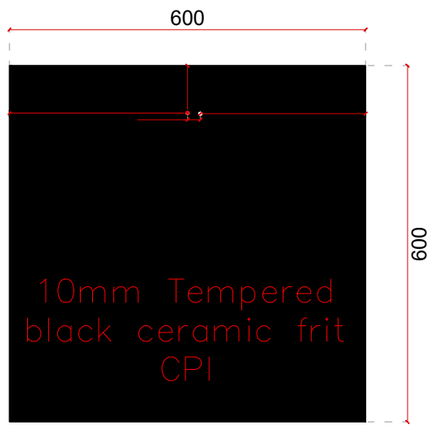

Signed by Customer:

SECTION
dimensions: mm.

DETAIL : Junction Box

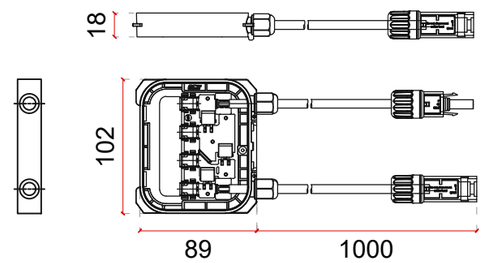

SECTION
dimensions: mm.

DETAIL 2: Junction box location

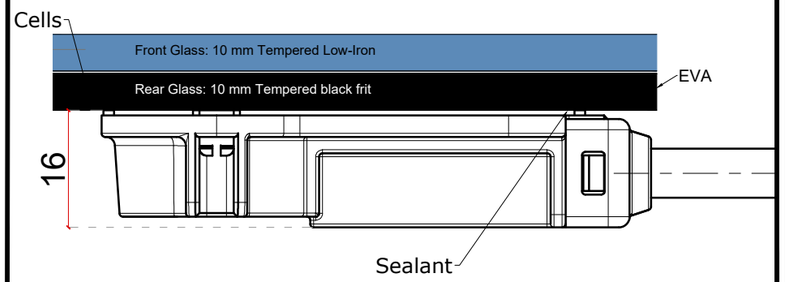

SECTION
dimensions: mm.

DETAIL 1: Glass configuration

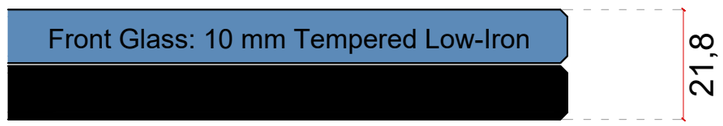

SECTION
dimensions: mm.

Photovoltaic Glass specifications:

Module Glass-Glass:	**600x600x21.8mm**
Glass dimension (mm):	**600x60x10 mm.**
Cell Technology:	**Mono crystalline back contact**
Cell dimension (mm):	**125 x 125mm (5"x 5")**
Number of cells:	**16 (4 strings / 4 cells per string)**
Encapsulant:	**EVA**
Junction box:	**QC102043**
Length cables:	**900mm**

Cell Type/Dimensions:

Mono-crystalline Back contact 5"

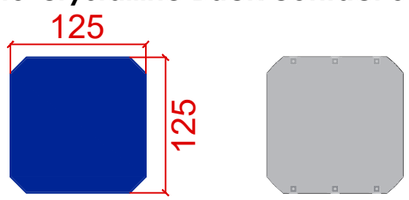

Front view Rear view

SECTION
dimensions: mm.

PROYECT: **BIPVBOOST_ISFOC_**	CUSTOMER: ONYX SOLAR ENERGY S.L.	QUANTITY: **192 units + 5 spare units**	**nº**
LOCATION: AVILA	ONYX DEPARTMENT: **I+D+i_ONYXSOLAR**	DATE: **21/01/2022**	**ISFOC_03**

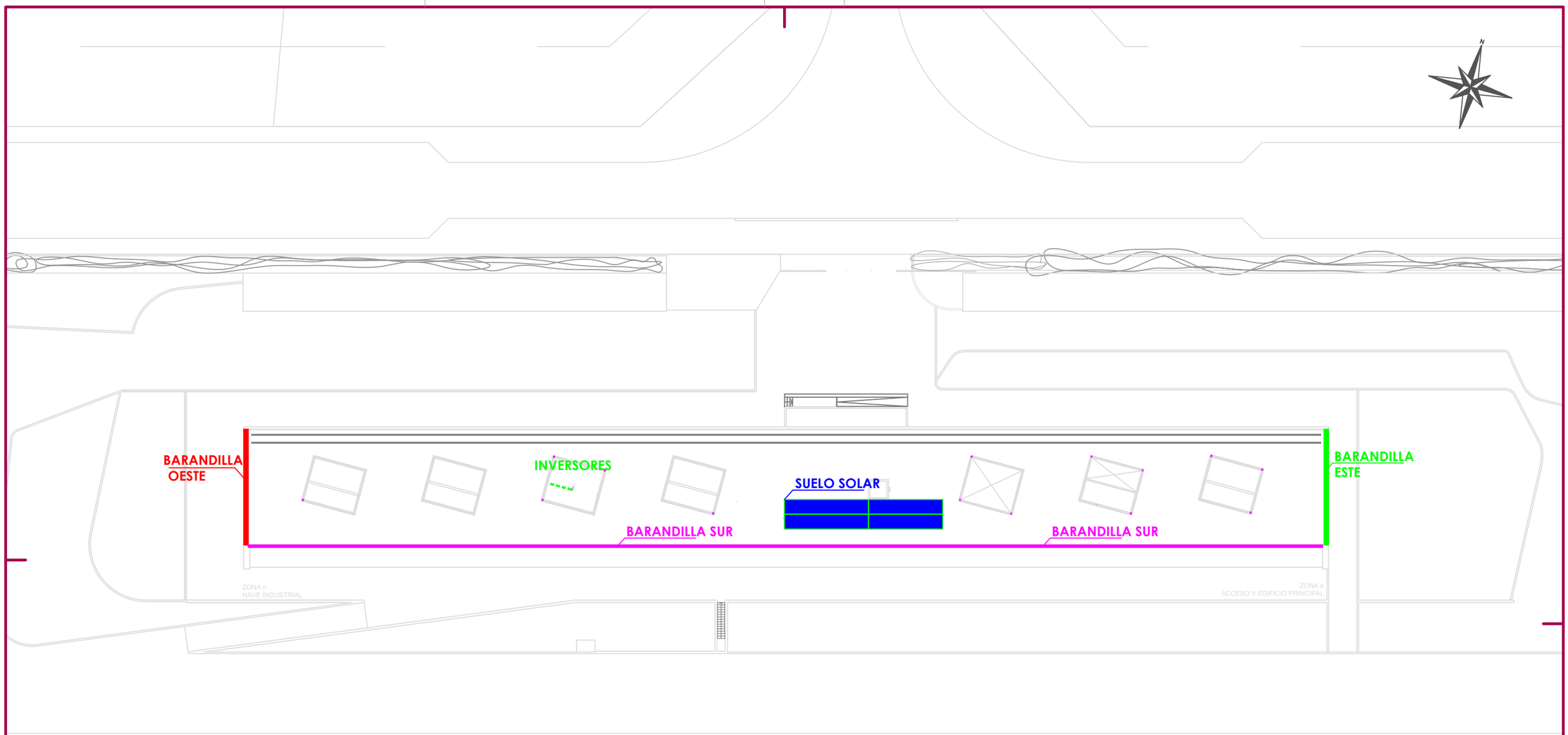

Revisión	Descripción	Realizado	Comprobado	Aprobado	Fecha
0	Creación	O.R.C.	O.R.C	O.R.C.	23/11/2021

Ingeniero autor del Proyecto

Oscar de la Rubia Carretero
Colegiado COIIM 13.594

Cliente

Unidad: m

Formato: A3

Escala: 1:500

Proyecto: Autoconsumo ISFOC

Expediente:

Plano: Implantación
Integración arquitectónica Azotea

Número: I4

Hoja 1 de 1

Plano_I04_Implantacion_Azotea.dwg

Este documento es propiedad de ISFOC, S.A. Queda estrictamente prohibida su divulgación sin su consentimiento expreso.

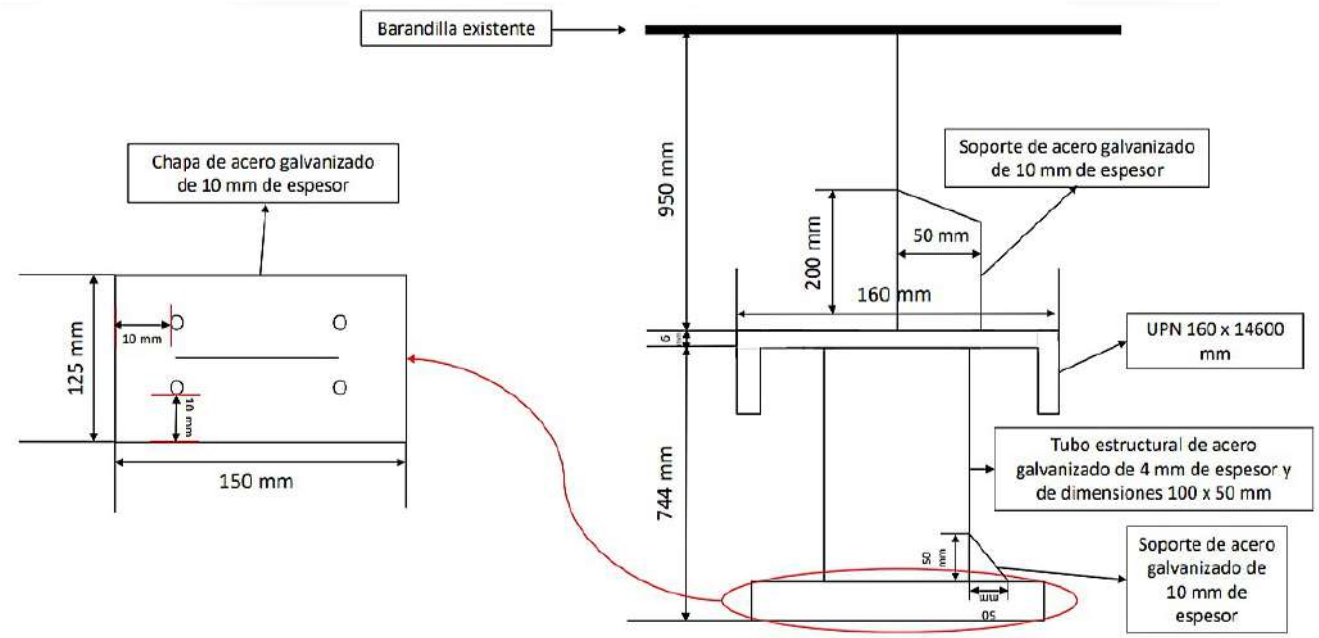
Barandilla existente
Chapa de acero galvanizado de 10 mm de espesor
125 mm
10 mm
10 mm
150 mm
950 mm
Soporte de acero galvanizado de 10 mm de espesor
200 mm
50 mm
160 mm
UPN 160 x 14600 mm
Tubo estructural de acero galvanizado de 4 mm de espesor y de dimensiones 100 x 50 mm
744 mm
Soporte de acero galvanizado de 10 mm de espesor

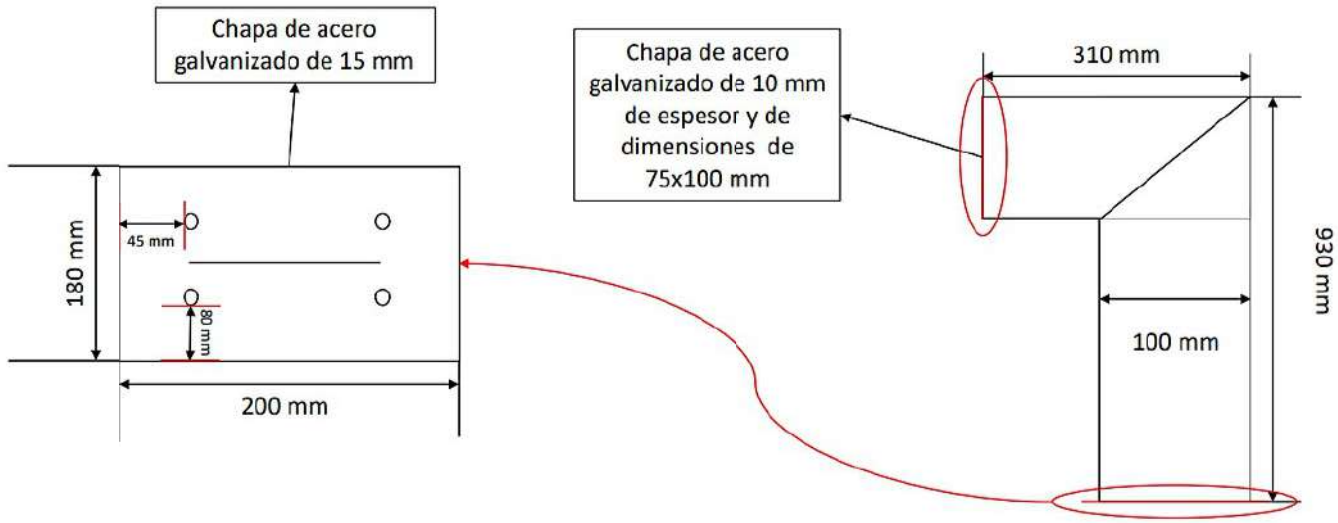
Chapa de acero galvanizado de 15 mm
180 mm
45 mm
80 mm
200 mm
Chapa de acero galvanizado de 10 mm de espesor y de dimensiones de 75x100 mm
310 mm
930 mm
100 mm

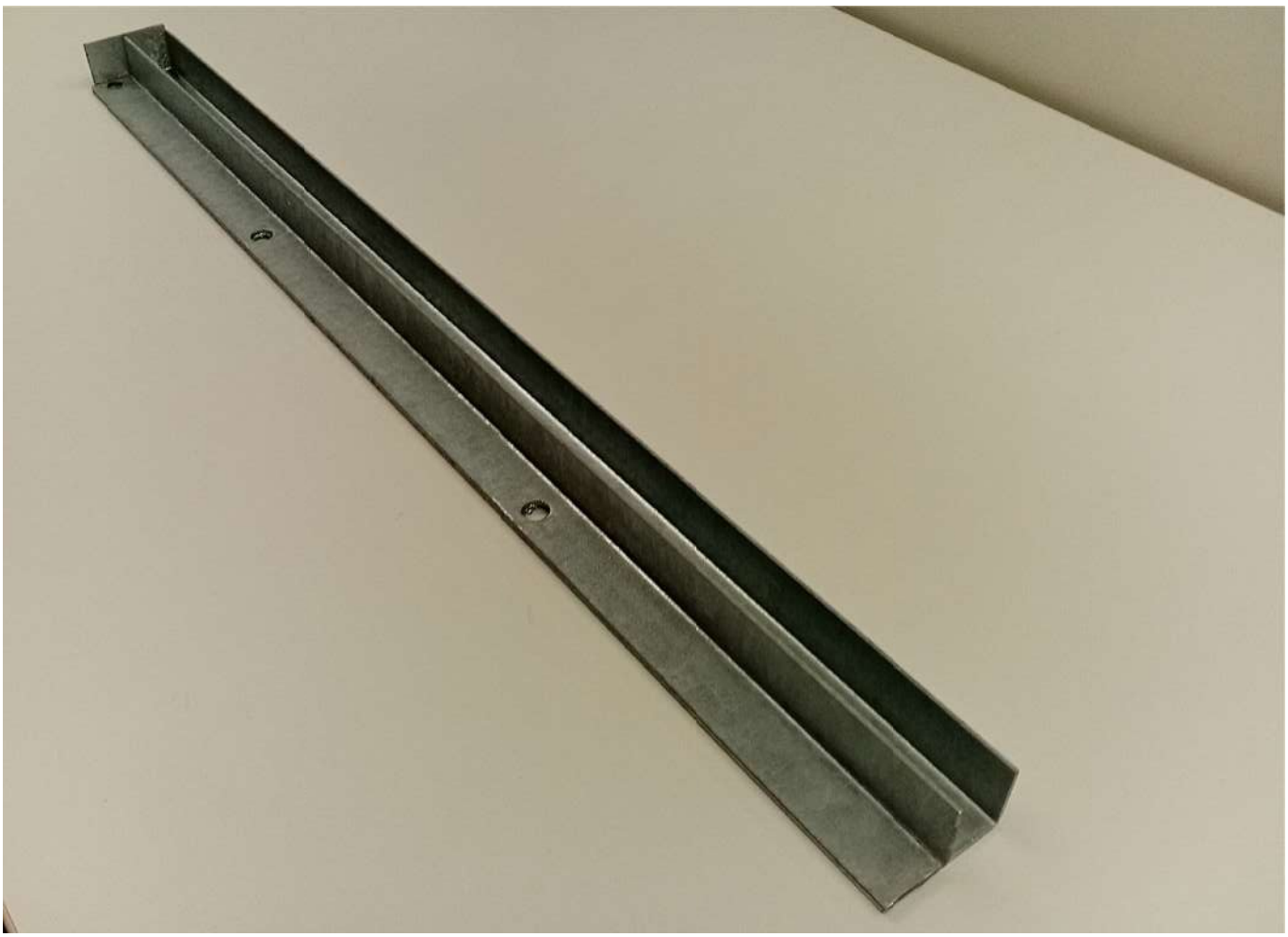

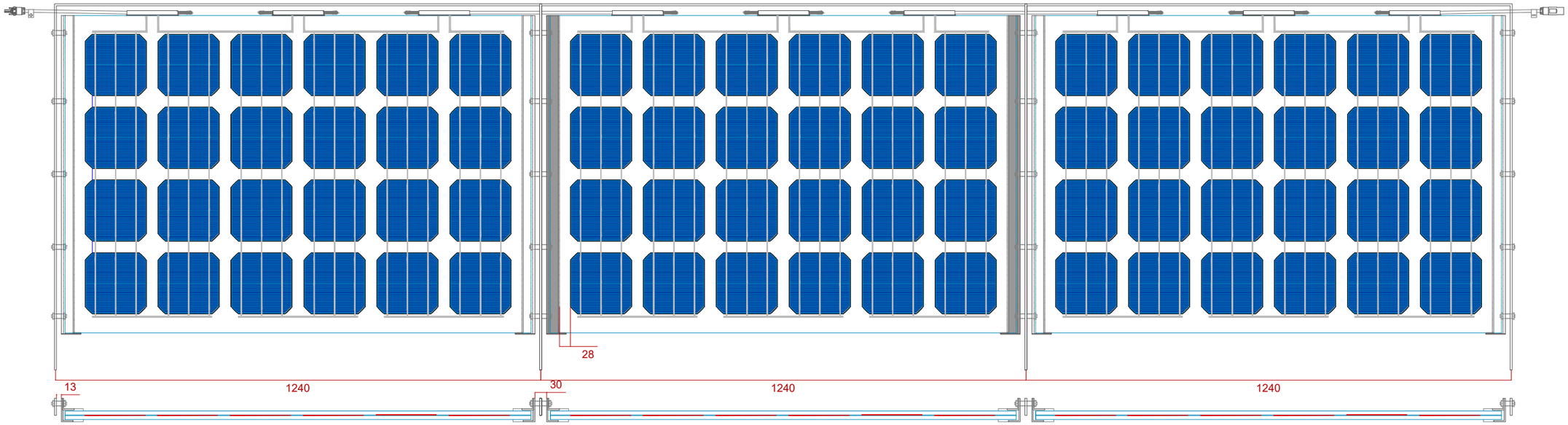
28
13
1240
30
1240
1240

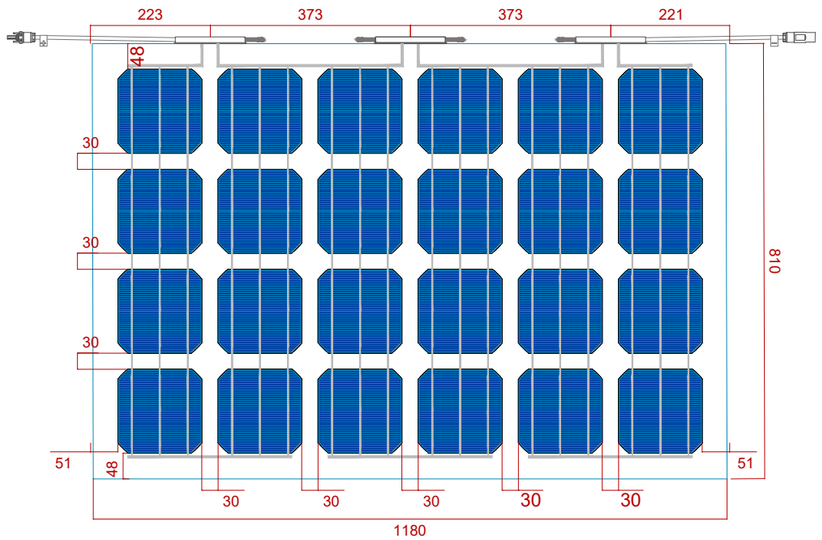
223
373
373
221
48
30
30
30
910
51
48
51
30
30
30
30
30
1180

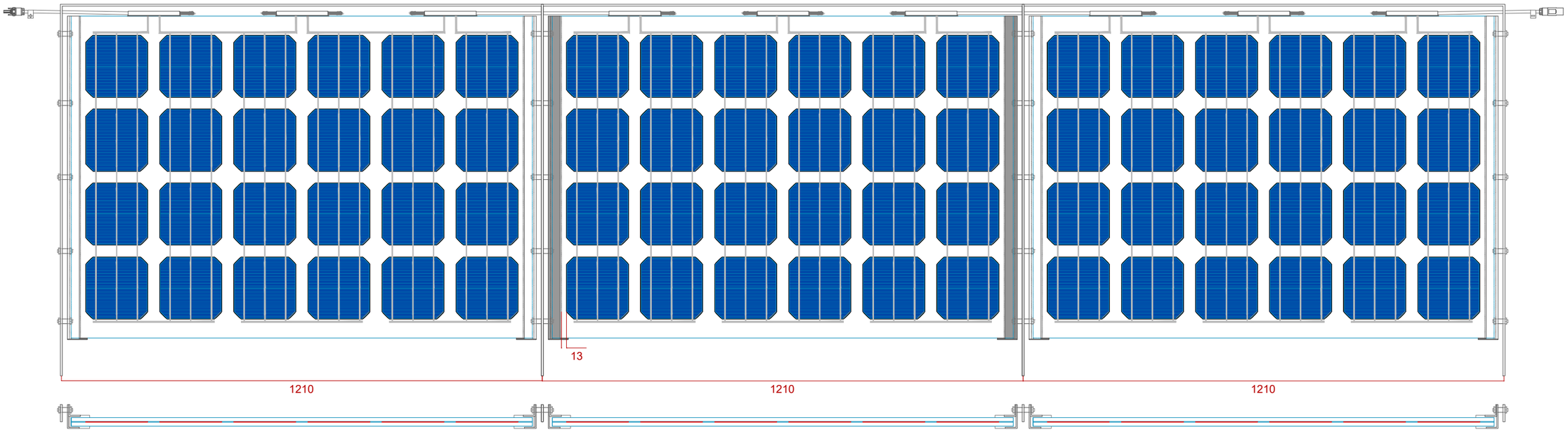
13
1210
1210
1210

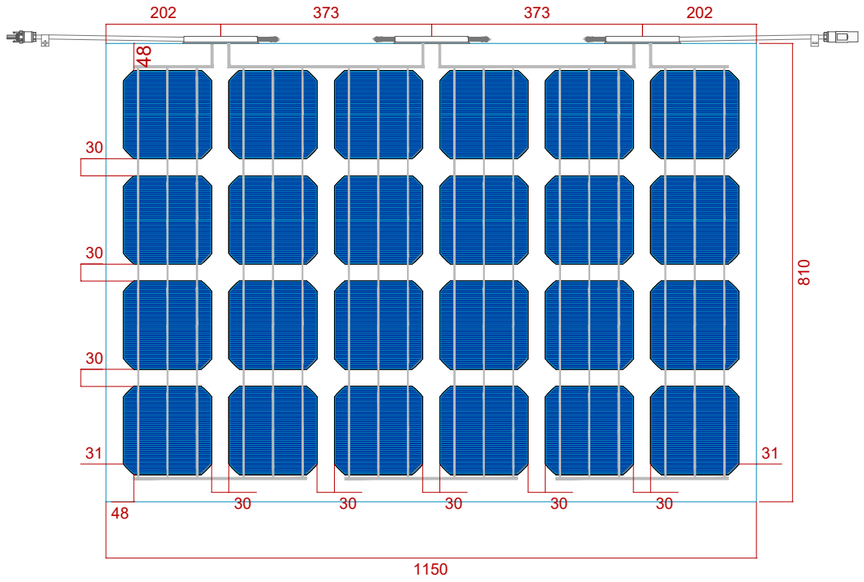
202
373
373
202
48
30
30
30
31
31
810
48
30
30
30
30
30
1150

Table.1 Data sheet for south balustrade

PHOTOVOLTAIC GLASS FRONT SIDE	1.180 x 810 6" Mono	Crystalline Bifacial
Electrical data test conditions (STC)		
Nominal peak power	97,2	P_{mpp} (Wp)
Open-circuit voltage	15,94	V_{oc} (V)
Short-circuit current	8,07	I_{sc} (A)
Voltage at nominal power	12,59	V_{mpp} (V)
Current at nominal power	7,72	I_{mpp} (A)
Power tolerance not to exceed	±10	%
STC: 1000 w/m², AM 15 and a cell temperature of 25°C, stabilized module state.		
Mechanical description		
Length	1180	mm
Width	810	mm
Thickness	21,8	mm
Surface area	0,96	sqm
Weight	48	Kgs
Cell type	6" Mono	Crystalline bifacial
No PV cells / Transparency degree	24	42%
Front Glass	10 mm	Tempered Glass Low-Iron
Rear Glass	10 mm	Tempered Glass Low-Iron
Thickness encapsulation	1,80 mm	EVA Foils
Category / Color code		
Junction Box		
Protection	IP65	
Wiring Section	2,5 mm^2 or	4,0 mm^2
Limits		
Maximum system voltage	1000	Vsys (V)
Operating module temperature	-40…+85	°C
Temperature Coefficients		
Temperature Coefficient of Pmpp	-0,451	%/°C
Temperature Coefficient of Voc	-0,361	%/°C
Temperature Coefficient of Isc	+0,08	%/°C

* All technical specifications are subject to change without notice by Onyx Solar

Table.2 Data sheet for west and east balustrade

PHOTOVOLTAIC GLASS FRONT SIDE	1.150 x 810 6" Mono	Crystalline Bifacial
Electrical data test conditions (STC)		
Nominal peak power	95,90	P_{mpp} (Wp)
Open-circuit voltage	15,93	V_{oc} (V)
Short-circuit current	7,88	I_{sc} (A)
Voltage at nominal power	12,47	V_{mpp} (V)
Current at nominal power	7,68	I_{mpp} (A)
Power tolerance not to exceed	±10	%
STC: 1000 w/m², AM 15 and a cell temperature of 25°C, stabilized module state.		
Mechanical description		
Length	1150	mm
Width	810	mm
Thickness	21,8	mm
Surface area	0,93	sqm
Weight	47	Kgs
Cell type	6" Mono	Crystalline bifacial
No PV cells / Transparency degree	24	41%
Front Glass	10 mm	Tempered Glass Low-Iron
Rear Glass	10 mm	Tempered Glass Low-Iron
Thickness encapsulation	1,80 mm	EVA Foils
Category / Color code		
Junction Box		
Protection	IP65	
Wiring Section	2,5 mm^2 or 4,0 mm^2	
Limits		
Maximum system voltage	1000	Vsys (V)
Operating module temperature	-40…+85	°C
Temperature Coefficients		
Temperature Coefficient of Pmpp	-0,451	%/°C
Temperature Coefficient of Voc	-0,361	%/°C
Temperature Coefficient of Isc	+0,08	%/°C

* All technical specifications are subject to change without notice by Onyx Solar

1.2 Walkable floors based on back-contact solar cells

Table.3 Data sheets for walkable floor

PHOTOVOLTAIC GLASS	600 x 600 5" Mono	Crystalline
Electrical data test conditions (STC)		
Nominal peak power	48	P_{mpp} (Wp)
Open-circuit voltage	11	V_{oc} (V)
Short-circuit current	5,71	I_{sc} (A)
Voltage at nominal power	9	V_{mpp} (V)
Current at nominal power	5,28	I_{mpp} (A)
Power tolerance not to exceed	±10	%
STC: 1000 w/m², AM 1.5 and a cell temperature of 25°C, stabilized module state.		
Mechanical description		
Length	600	mm
Width	600	mm
Thickness	21,8	mm
Surface area	0,36	sqm
Weight	18	Kgs
Cell type	5" Mono	Back Contact Cells
No PV cells / Transparency degree	16	0%
Front Glass	10 mm	Tempered Glass Anti-slip
Rear Glass	10 mm	Tempered Glass
Thickness encapsulation	1,80 mm	EVA Foils
Category / Color code		
Junction Box		
Protection	IP65	
Wiring Section	2,5 mm^2 or	4,0 mm^2
Limits		
Maximum system voltage	1000	Vsys (V)
Operating module temperature	-40…+85	°C
Temperature Coefficients		
Temperature Coefficient of Pmpp	-0,451	%/°C
Temperature Coefficient of Voc	-0,361	%/°C
Temperature Coefficient of Isc	+0,08	%/°C

* All technical specifications are subject to change without notice by Onyx Solar
NOTE: Anti-slipery glass induce a 5% of power loss. It has been considered in this data sheet.

Smart Energy Controller

Active Safety

AI Powered
Active Arcing Protection

Higher Yields

Up to 30% More
Energy with Optimizer

2x POWER Battery Ready

5KW AC Output plus
5KW Battery Charge

Efficiency Curve

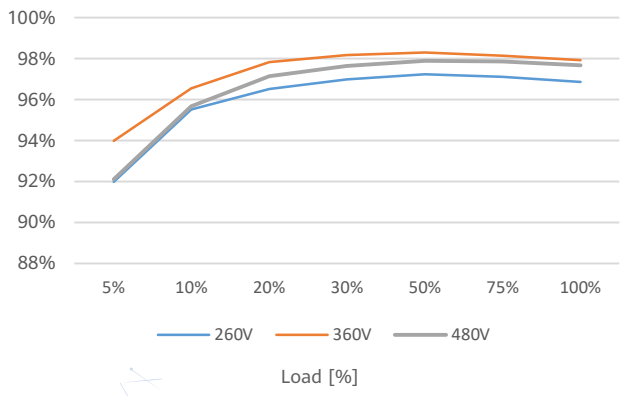

Circuit Diagram

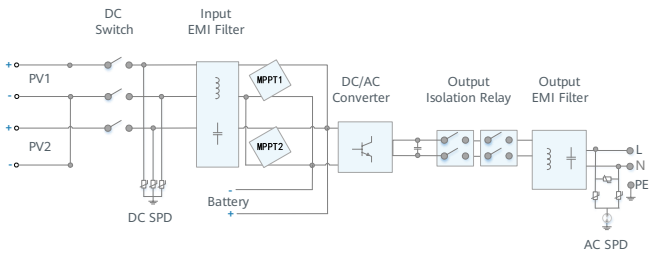

SUN2000-2/3/3.68/4/4.6/5/6KTL-L1

Technical Specification

Technical Specification	SUN2000 -2KTL-L1	SUN2000 -3KTL-L1	SUN2000 -3.68KTL-L1	SUN2000 -4KTL-L1	SUN2000 -4.6KTL-L1	SUN2000 -5KTL-L1	SUN2000 -6KTL-L1
Efficiency							
Max. efficiency	98.2 %	98.3 %	98.4 %	98.4 %	98.4 %	98.4 %	98.4 %
European weighted efficiency	96.7 %	97.3 %	97.3 %	97.5 %	97.7 %	97.8 %	97.8 %
Input (PV)							
Recommended max. PV power [1]	3,000 Wp	4,500 Wp	5,520 Wp	6,000 Wp	6,900 Wp	7,500 Wp	9,000 Wp
Max. input voltage	600 V [2]						
Start-up voltage	100 V						
MPPT operating voltage range	90 V – 560 V [2]						
Rated input voltage	360 V						
Max. input current per MPPT	12.5 A						
Max. short-circuit current	18 A						
Number of MPP trackers	2						
Max. input number per MPP tracker	1						
Input (DC Battery)							
Compatible Battery	LG Chem RESU 7H_R / 10H_R						
Operating voltage range	350 ~ 450 Vdc						
Max operating current	10 A @7H_R / 15 A @10H_R						
Max charge power	3,500 W @7H_R / 5,000 W @10H_R						
Max discharge Power @7H_R	2,200 W	3,300 W	3,500 W	3,500 W	3,500 W	3,500 W	3,500 W
Max discharge Power @10H_R	2,200 W	3,300 W	3,680 W	4,400 W	4,600 W	5,000 W	5,000 W
Compatible Battery	HUAWEI Smart LUNA2000 ESS Battery 5kWh – 30kWh						
Operating voltage range	350 ~ 560 Vdc						
Max operating current	15 A						
Max charge Power	5,000 W [3]						
Max discharge Power	2,200 W	3,300 W	3,680 W	4,400 W	4,600 W	5,000 W	5,000 W
Output (On Grid)							
Grid connection	Single phase						
Rated output power	2,000 W	3,000 W	3,680 W	4,000 W	4,600 W	5,000 W [4]	6,000 W
Max. apparent power	2,200 VA	3,300 VA	3,680 VA	4,400 VA	5,000 VA [5]	5,500 VA [6]	6,000 VA
Rated output voltage	220 Vac / 230 Vac / 240 Vac						
Rated AC grid frequency	50 Hz / 60 Hz						
Max. output current	10 A	15 A	16 A	20 A	23 A [7]	25 A [7]	27.3 A
Adjustable power factor	0.8 leading ... 0.8 lagging						
Max. total harmonic distortion	≤ 3 %						
Output (Off Grid)							
Backup Box (Optional)	Backup Box – B0						
Maximum apparent power	2,000 VA	3,000 VA	3,680 VA	4,000 VA	4,600 VA	5,000 VA	5,000 VA
Rated output voltage	220 V / 230 V						
Maximum output current	9.1 A	13.6 A	16.7 A	18.2 A	20.9 A	22.7 A	22.7 A
Power factor range	0.8 leading ... 0.8 lagging						

*1 Inverter max input PV power is 10,000 Wp when long strings are designed and fully connected with SUN2000-450W-P power optimizers.
*2 The maximum input voltage and operating voltage upper limit will be reduced to 495 V when inverter connects and works with LG battery.
*3 2,500 W @ 5kWh HUAWEI ESS battery
*4 AS4777.2: 4,991W. *5. VDE-AR-N 4105: 4,600VA / AS4777.2: 4,999VA. *6. AS4777.2: 4,999VA / C10/11:5,000VA *7. AS4777.2: 21.7A.

Technical Specification

Technical Specification	SUN2000 -2KTL-L1	SUN2000 -3KTL-L1	SUN2000 -3.68KTL-L1	SUN2000 -4KTL-L1	SUN2000 -4.6KTL-L1	SUN2000 -5KTL-L1	SUN2000 -6KTL-L1[1]
Protection & Feature							
Anti-Islanding protection	Yes						
DC reverse polarity protection	Yes						
Insulation monitoring	Yes						
DC surge protection	Yes, compatible with TYPE II protection class according to EN/IEC 61643-11						
AC surge protection	Yes, compatible with TYPE II protection class according to EN/IEC 61643-11						
Residual current monitoring	Yes						
AC overcurrent protection	Yes						
AC short-circuit protection	Yes						
AC overvoltage protection	Yes						
Over-heat protection	Yes						
Arc fault protection	Yes						
Battery reverse charging from grid	Yes						
General Data							
Operating temperature range	-25 ~ +60 °C						
Relative operating humidity	0 %RH ~ 100 %RH						
Max. operating altitude	4,000 m (13,123 ft.) (Derating above 2000 m)						
Cooling	Natural convection						
Display	LED indicators; integrated WLAN + FusionSolar APP						
Communication	RS485, WLAN via inverter built-in WLAN module Ethernet via Smart Dongle-WLAN-FE (Optional); 4G / 3G / 2G via Smart Dongle-4G (Optional)						
Weight (incl. mounting bracket)	12.0 kg (26.5 lb)						
Dimension (incl. mounting bracket)	365mm * 365mm * 156 mm (14.4 x 14.4 x 6.1 inch)						
Degree of protection	IP65						
Nighttime power consumption	< 2.5 W						
Optimizer Compatibility							
DC MBUS compatible optimizer	SUN2000-450W-P						
Standard Compliance (more available upon request)							
Safety	EN/IEC 62109-1, EN/IEC 62109-2						
Grid connection standards	G98, G99, EN 50549-1, CEI 0-21, VDE-AR-N-4105, AS 4777.2, C10/11, ABNT, UTE C15-712, RD 1699, TOR D4, IEC61727, IEC62116						

Smart Energy Controller

Active Safety

AI Powered
Active Arcing Protection

Higher Yields

Up to 30% More Energy
with Optimizer [1]

Battery Ready

Plug & Play battery interface [2]

Flexible Communication

WLAN, Fast Ethernet, 4G
Communication Supported

Efficiency Curve

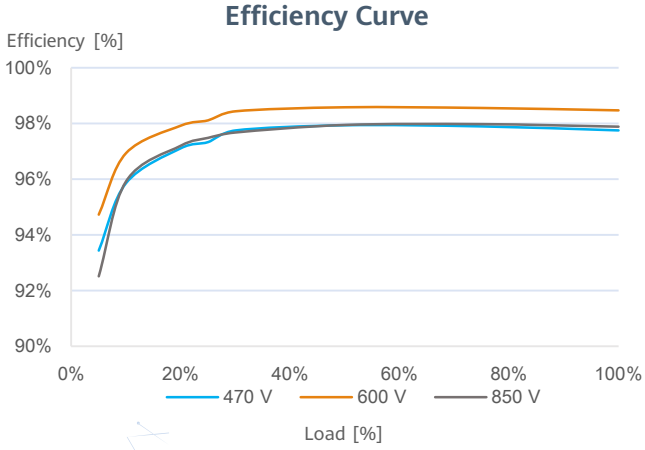

Circuit Diagram

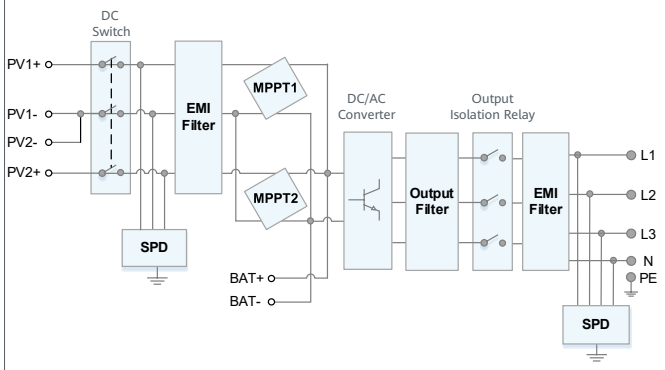

SUN2000-3/4/5/6/8/10KTL-M0/M1

*1. Only applicable to SUN2000-3/4/5/6/8/10KTL-M1 smart energy center.
*2. SUN2000-3/4/5/6/8/10KTL-M0 will be compatible with HUAWEI smart string ESS in Q1, 2021

SUN2000-3/4/5/6/8/10KTL-M1

Technical Specification

Technical Specification	SUN2000 -3KTL-M1	SUN2000 -4KTL-M1	SUN2000 -5KTL-M1	SUN2000 -6KTL-M1	SUN2000 -8KTL-M1	SUN2000 -10KTL-M1
Efficiency						
Max. efficiency	98.2%	98.3%	98.4%	98.6%	98.6%	98.6%
European weighted efficiency	96.7%	97.1%	97.5%	97.7%	98.0%	98.1%
Input (PV)						
Recommended max. PV power [1]	4,500 Wp	6,000 Wp	7,500 Wp	9,000 Wp	12,000 Wp	15,000 Wp
Max. input voltage [2]	1,100 V					
Operating voltage range [3]	140 V ~ 980 V					
Start-up voltage	200 V					
Rated input voltage	600 V					
Max. input current per MPPT	11 A					
Max. short-circuit current	15 A					
Number of MPP trackers	2					
Max. input number per MPP tracker	1					
Input (DC Battery)						
Compatible Battery	HUAWEI Smart String ESS 5kWh – 30kWh					
Operating voltage range	600 V ~ 980 V					
Max operating current	16.7 A					
Max charge Power	10,000 W					
Max discharge Power	3,300 W	4,400 W	5,500 W	6,600 W	8,800 W	10,000 W
Output (On Grid)						
Grid connection	Three-phase					
Rated output power	3,000 W	4,000 W	5,000 W	6,000 W	8,000 W	10,000 W
Max. apparent power	3,300 VA	4,400 VA	5,500 VA	6,600 VA	8,800 VA	11,000 VA [4]
Rated output voltage	220 Vac / 380 Vac, 230 Vac / 400 Vac, 3W / N+PE					
Rated AC grid frequency	50 Hz / 60 Hz					
Max. output current	5.1 A	6.8 A	8.5 A	10.1 A	13.5 A	16.9 A
Adjustable power factor	0.8 leading ... 0.8 lagging					
Max. total harmonic distortion	≤ 3 %					
Output (Off Grid)						
Backup Box	Backup Box – B1					
Maximum apparent power	3,000 VA	3,300 VA	3,300 VA	3,300 VA	3,300 VA	3,300 VA
Rated output voltage	220 V / 230 V					
Maximum output current	13.6 A	15 A	15 A	15 A	15 A	15 A
Power factor range	0.8 leading ... 0.8 lagging					
Features & Protections						
Input-side disconnection device	Yes					
Anti-Islanding protection	Yes					
DC reverse polarity protection	Yes					
Insulation monitoring	Yes					
DC surge protection	Yes, compatible with TYPE II protection class according to EN/IEC 61643-11					
AC surge protection	Yes, compatible with TYPE II protection class according to EN/IEC 61643-11					
Residual current monitoring	Yes					
AC overcurrent protection	Yes					
AC short-circuit protection	Yes					
AC overvoltage protection	Yes					
Arc fault protection	Yes					
Ripple receiver control	Yes					
Integrated PID recovery [5]	Yes					
Battery reverse charging from grid	Yes					
General Data						
Operating temperature range	-25 ~ + 60 °C (-13 °F ~ 140 °F)					
Relative operating humidity	0 %RH ~ 100 %RH					
Max. operating altitude	4,000 m (13,123 ft.) (Derating above 2000 m)					
Cooling	Natural convection					
Display	LED Indicators; Integrated WLAN + FusionSolar App					
Communication	RS485; WLAN/Ethernet via Smart Dongle-WLAN-FE; 4G / 3G / 2G via Smart Dongle-4G (Optional)					
Weight (incl. mounting bracket)	17 kg (37.5 lb)					
Dimension (incl. mounting bracket)	525 x 470 x 146.5 mm (20.7 x 18.5 x 5.8 inch)					
Degree of protection	IP65					
Nighttime Power Consumption	< 5.5 W [6]					
Optimizer Compatibility						
DC MBUS compatible optimizer	SUN2000-450W-P					
Standard Compliance (more available upon request)						
Certificate	EN/IEC 62109-1, EN/IEC 62109-2, IEC 62116					
Grid connection standards	G98, G99, EN 50438, CEI 0-21, VDE-AR-N-4105, AS 4777, C10/11, ABNT, UTE C15-712, RD 1699, TOR D4, NRS 097-2-1, IEC61727, IEC62116, DEWA					

*1 Inverter max input PV power is 20,000 Wp when long strings are designed and fully connected with SUN2000-450W-P power optimizers.
*2 The maximum input voltage is the upper limit of the DC voltage. Any higher input DC voltage would probably damage inverter.
*3 Any DC input voltage beyond the operating voltage range may result in inverter improper operating. *4 C10 / 11: 10,000 VA
*5 SUN2000-3~10KTL-M1 raises potential between PV- and ground to above zero through integrated PID recovery function to recover module degradation from PID. Supported module types include: P-type (mono, poly).
*6. <10 W when PID recovery function is activated.

Smart String Energy Storage System

More Usable Energy

100% Depth of Discharge
Pack Level Energy Optimization

Flexible Investment

5kWh Modular Design,
Scalable from 5 to 30 kWh

Safe & Reliable

Lithium Iron Phosphate (LFP) Cell

Easy Installation

12 kg Power Module
50 kg Battery Module

Quick Commissioning

Automatically Detected in App

Perfect Compatibility

Compatible to Both Residential
Single & Three Phase Inverter

Technical Specification

Technical Specification	LUNA2000-5-S0	LUNA2000-10-S0	LUNA2000-15-S0
		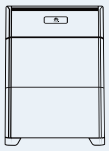	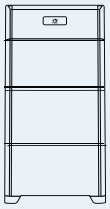

Performance

Power module	LUNA2000-5KW-C0		
Number of power modules	1		
Battery module	LUNA2000-5-E0		
Battery module energy	5 kWh		
Number of battery Modules	1	2	3
Battery usable energy [1]	5 kWh	10 kWh	15 kWh
Max. output power	2.5 kW	5 kW	5 kW
Peak output power	3.5 kW, 10 s	7 kW, 10 s	7 kW, 10 s
Nominal voltage (single phase system)	450 V		
Operating voltage range (single phase system)	350 – 560 V		
Nominal voltage (three phase system)	600 V		
Operating voltage range (three phase system)	600 – 980 V		

Communication

Display	SOC status indicator, LED indicator
Communication	RS485 / CAN (only for parallel operation)

General Specification

Dimension (W*D*H)	670 * 150 * 600 mm (26.4 * 5.9 * 23.6 inch)	670 * 150 * 960 mm (26.4 * 5.9 * 37.8 inch)	670 * 150 * 1320 mm (26.4 * 5.9 * 60.0 inch)
Weight (Floor stand toolkit included)	63.8 kg (140.7 lb)	113.8 kg (250.9 lb)	163.8 kg (361.1 lb)
Power module dimension (W*D*H)	670 * 150 * 240 mm (26.4 * 5.9 * 9.4 inch)		
Power module weight	12 kg (26.5 lb)		
Battery module dimension (W*D*H)	670 * 150 * 360 mm (26.4 * 5.9 * 14.0 inch)		
Battery module weight	50 kg (110.2 lb)		
Installation	Floor stand (standard), Wall mount (optional)		
Operating temperature	-10℃ ~ + 55℃ (-4℉ ~ 131℉) [2]		
Max. operating altitude	4,000 m (13,123 ft.) (Derating above 2,000 m)		
Environment	Indoor / Outdoor		
Relative humidity	5% ~ 95%		
Cooling	Natural convection		
Protection rating	IP 66		
Noise emission	<29 dB		
Cell technology	Lithium-iron phosphate (LiFePO4)		
Scalability	Max. 2 systems in parallel operation		
Compatible inverters	SUN2000-2/3/3.68/4/4.6/5/6KTL-L1, SUN2000-3/4/5/6/8/10KTL-M0 [4], SUN2000-3/4/5/6/8/10KTL-M1		

Standard Compliance (more available upon request)

Certificates	CE, RCM, CEC, VDE2510-50, IEC62619, IEC 60730, UN38.3

Ordering and Deliverable Part

Product ordering model [5]	LUNA2000-5KW-C0, LUNA2000-5-E0, LUNA2000 Wall Mounting Bracket

1. Test conditions: 100% depth of discharge (DoD), 0.2C rate charge & discharge at 25℃
2. Charge/discharge derating occurs when the operating temperature from -20℃ to 5 ℃.& 45 ℃ to 55 ℃.
3. Refer to battery warranty letter for conditional application.
4. Available in Q1, 2021
5. Storage system is ordered and delivered in the form of power module and battery module separately with corresponding quantity.

Smart Dongle-WLAN-FE

Inteligente

Comunicación WLAN y Fast Ethernet (FE)
Soporte de sistema de monitoreo de terceros [1]

Sencillo

Plug & Play
Soporta max.10 dispositivo

Confiable

IP65
Soporte para reconexión automática

Especificaciones técnicas	SDongleA-05
Datos generales	
Max. Dispositivos soportados	10
Max. Inversores soportados	10
Interfaz de conexión	USB
Interfaz Ethernet	10/100M Ethernet
Instalación	Plug-and-play
Indicador	LED Indicator
Dimensiones (anchura x altura x profundidad)	146 x 48 x 33 mm
Peso	90 g
Grado de protección	IP65
Consumo de energía (típico)	2.5 W
Modo de operación	STA
Algoritmo de encriptación	Mecanismo de encriptación: WPA/WPA2 Encriptación: TKIP/CCMP/AES
Parámetros inalámbricos	
Soporte estándar y frecuencia	802.11b/g/n（2.412G—2.484G）
Condiciones de operación	
Rango de temperatura de operación	-30 ℃ to +65 ℃
Humedad de operación relativa	5 - 95% RH
Rango de temperatura de almacenamiento	-40℃ to +70℃
Max. altitud operativa	4,000 m
Cumplimiento estándar (mayor disponibilidad bajo pedido)	
Certificado	SRRC, CE, RCM
Inversores Compatibles	
Modelos de inversor	SUN2000-2/3/3.68/4/4.6/5/6KTL-L1 SUN2000-3/4/5/6/8/10KTL-M0 SUN2000-12/15/17/20KTL-M0/M2

*1: El sistema de gestión de terceros debe coincidir con el protocolo de comunicaciones del Smart Dongle de Huawei.

SmartLogger3000A

Smart
Smart zero export control design

Simple
Easy to install on site

Reliable
Safety by lightning protection module

Technical Specification	SmartLogger3000A03EU	SmartLogger3000A01EU
Device Management		
Max. Number of Connected Devices	80	
Communication Interface		
WAN	WAN x 1, 10 / 100 / 1000 Mbps	
LAN	LAN x 1, 10 / 100 / 1000 Mbps	
RS485	COM x 3, 1200 / 2400 / 4800 / 9600 / 19200 / 115200 bps, 1000 m	
MBUS	MBUS x 1, 115.2 kbps, Compatible with PLC	No MBUS Communication Interface
2G / 3G / 4G [1]	LTE(FDD) : B1,B2,B3,B4,B5,B7,B8,B20 DC-HSPA+/HSPA+/HSPA/UMTS : 850/900/1900/2100 MHz GSM/GPRS/EDGE: 850/900/1800/1900 MHz [2]	
Digital / Analog Input / Output	DI x 4, DO x 2, AI x 4	
Active DO	12V, 100mA (connection with relay, sensor)	
Communication Protocol		
Ethernet	Modbus-TCP, IEC 60870-5-104	
RS485	Modbus-RTU, IEC 60870-5-103 (standard), DL / T645	
Interaction		
LED	LED Indicator x 3 – RUN, ALM, 4G	
WEB	Embedded Web	
USB	USB 2.0 x 1	
APP	Communication by WLAN for Commissioning	
Environment		
Operating Temperature Range	-40°C ~ 60°C (-40°F ~ 140°F)	
Storage Temperature	-40°C ~ 70°C (-40°F ~ 158°F)	
Relative Humidity (Non-condensing)	5% ~ 95%	
Max. Operating Altitude	4,000 m (13,123 ft.)	
Electrical		
AC Power Supply	100 V ~ 240 V, 50 Hz / 60 Hz	
DC Power Supply	12 V / 24 V	
Power Consumption	Typical 8 W, Max. 15 W	
Mechanical		
Dimensions (W x H x D)	225 x 160 x 44 mm (8.9 x 6.3 x 1.7 inch, without mounting ears and antenna)	
Weight	2 kg (4.4 lb.)	
Protection Degree	IP20	
Installation Options	Wall Mounting, DIN Rail Mounting, Tabletop Mounting	

*1: When putting inside metal box, extended antenna will be needed.
*2: For recommended carriers list and details on supported frequencies, please contact local distributors.

FICHA TÉCNICA | APOYO REGULABLE | MODELO : LIZA 1000

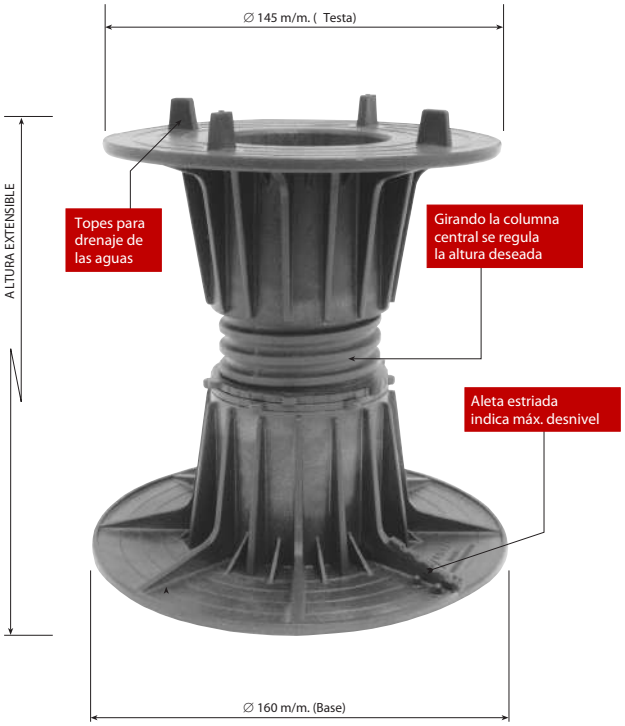

La obtencion de los 3 elementos que forman el conjunto se fabrican por termo-inyeccion.

Regulación milimetrica con la simple manipulación del "GIRADOR" intermedio.

Regulación de alturas a partir de 65 mm (altura máxima opcional).

Material reciclable y totalmente valido para su reutilización.

Desniveles en BASE de 0% - 1% y 2%.

Drenaje entre losas = 4 mm. obligado por el grueso de las pestañas.

COMPONENTES DEL CONJUNTO

	CABEZAL SUPERIOR	GIRADOR/ROSCA	BASE INFERIOR
MATERIAL	Poliolefina omo y popolimero con adicion de carga mineral	Poliolefina omo y popolimero con adicion de carga mineral	Poliolefina omo y popolimero con adicion de carga mineral
COLOR	Negro	Negro	Negro
ZONA APOYO	140/150 mm. de diametro	--------	150/160 mm. de diametro
ROSCA	Trapezoidal. Paso 8 mm.	Trapezoidal. Paso 8 mm.	Trapezoidal. Paso 8 mm.
DIAMETRO ROSCA	61 mm. exterior	61 mm. exterior	61 mm. exterior

CARACTERÍSTICAS FÍSICAS:

· Resistencia a la rotura por compresión: 1000 kg.
· Estabilidad térmica: -25º a +110ºC
· Es resistente al envejecimiento, a la intemperie e imputrescible
· Gran estabilidad dimensional por su alto contenido en carga mineral

CARACTERÍSTICAS QUÍMICAS:

· Resistente a soluciones acuosas de sales inorganicas, ácidos y álcalis.
· Resistente a la mayoría de disolventes orgánicos como alcoholes, ésteres y cetonas.
· Resistente a soluciones de detergentes comerciales y lejías.
· Resistente a microorganismos por no constituir terreno de cultivo para estos.
· No resistente a sustancias oxidantes como ácido nítrico o sulfúrico y a disolventes hidrocarburos halogenados como gasolina.

CODIGO "CE": El instituto de tecnología de la construcción "ITEC" a través del director de servicios administrativos **DECLARA** que los productos fabricados y distribuidos por Lizabar Plastics SL APOYO REGULARES PARA PAVIMENTO FLOTANTE, no disponen de ninguna especificación técnica europea que les sea aplicable, y por lo tanto, no es obligatorio que estén marcados "CE".

Nº CERTIFICADO: 8452 / FECHA DE SALIDA: 29-03-2011 / EMITIDO POR: INSTITUTO TECNOLOGÍA DE LA CONSTRUCCIÓN

LIZABAR PLASTICS s.l.

DESARROLLOS Y PROYECTOS PLÁSTICOS
POR PROCESOS DE TERMO-INYECCIÓN

Binéfar, 37, local 26-28 - 08020 Barcelona (España)
Tel. 93 305 63 61 - Fax 93 305 63 61
e-mail: lizabar@lizabar.com - web: lizabar.com

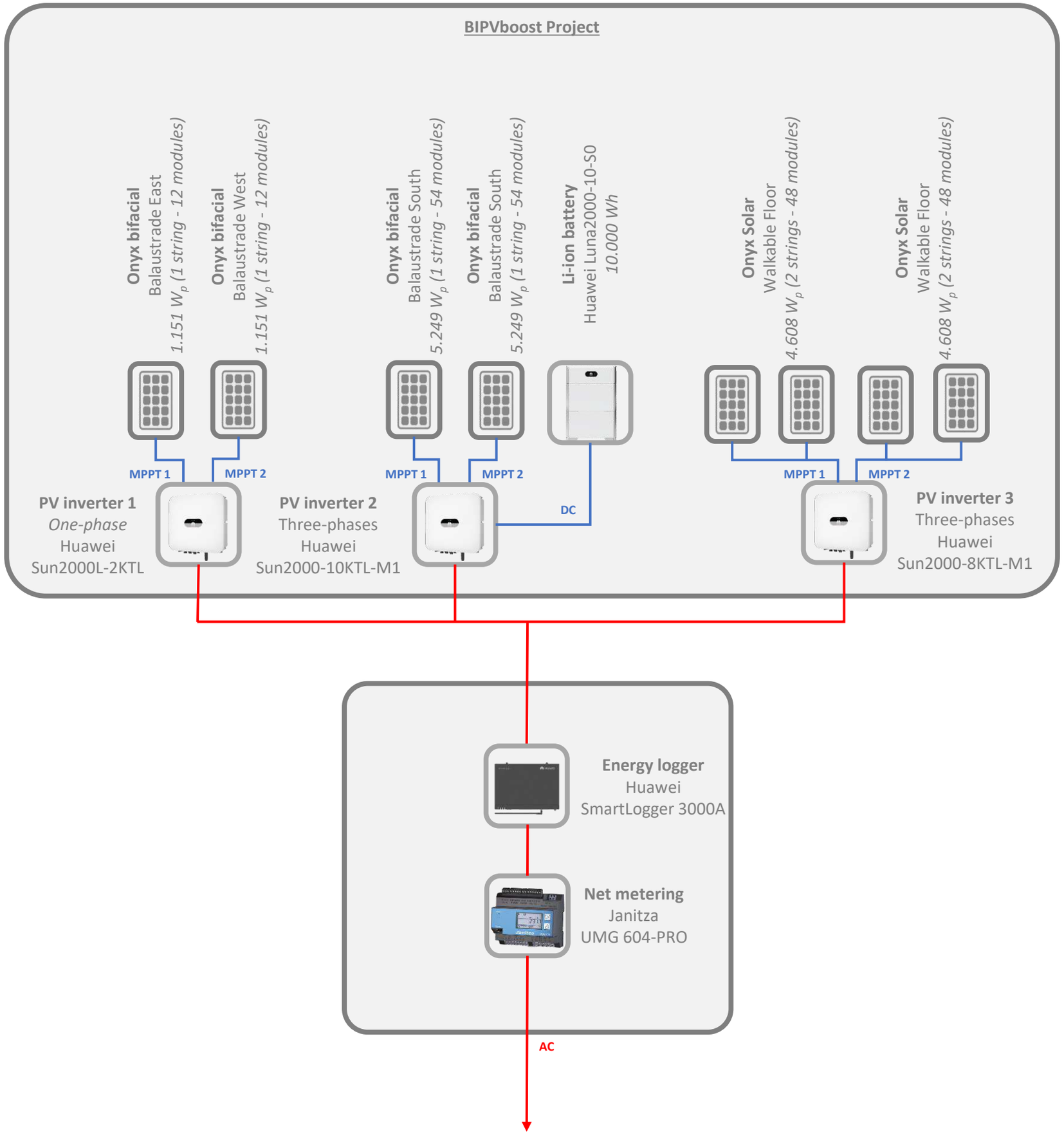
BIPVboost Project
Onyx bifacial
Balaustrade East
1.151 Wp (1 string - 12 modules)
Onyx bifacial
Balaustrade West
1.151 Wp (1 string - 12 modules)
Onyx bifacial
Balaustrade South
5.249 Wp (1 string - 54 modules)
Onyx bifacial
Balaustrade South
5.249 Wp (1 string - 54 modules)
Li-ion battery
Huawei Luna2000-10-S0
10.000 Wh
Onyx Solar
Walkable Floor
4.608 Wp (2 strings - 48 modules)
Onyx Solar
Walkable Floor
4.608 Wp (2 strings - 48 modules)
MPPT 1
MPPT 2
MPPT 1
MPPT 2
MPPT 1
MPPT 2
DC
PV inverter 1
One-phase
Huawei
Sun2000L-2KTL
PV inverter 2
Three-phases
Huawei
Sun2000-10KTL-M1
PV inverter 3
Three-phases
Huawei
Sun2000-8KTL-M1
Energy logger
Huawei
SmartLogger 3000A
Net metering
Janitza
UMG 604-PRO
AC

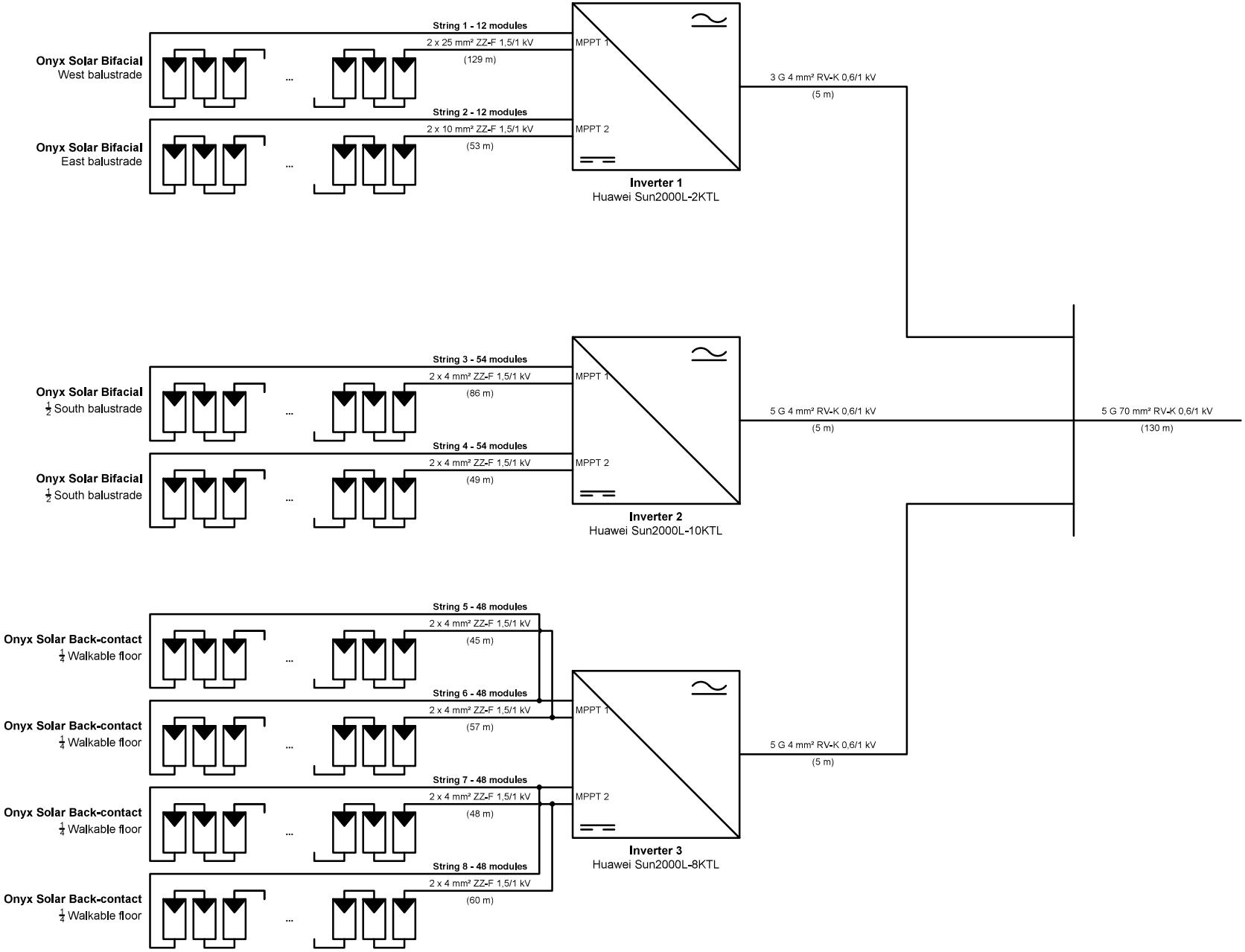
Onyx Solar Bifacial
West balustrade
Onyx Solar Bifacial
East balustrade
String 1 - 12 modules
2 x 25 mm² ZZ-F 1,5/1 kV
(129 m)
String 2 - 12 modules
2 x 10 mm² ZZ-F 1,5/1 kV
(53 m)
MPPT 1
MPPT 2
Inverter 1
Huawei Sun2000L-2KTL
3 G 4 mm² RV-K 0,6/1 kV
(5 m)
Onyx Solar Bifacial
½ South balustrade
Onyx Solar Bifacial
½ South balustrade
String 3 - 54 modules
2 x 4 mm² ZZ-F 1,5/1 kV
(86 m)
String 4 - 54 modules
2 x 4 mm² ZZ-F 1,5/1 kV
(49 m)
MPPT 1
MPPT 2
Inverter 2
Huawei Sun2000L-10KTL
5 G 4 mm² RV-K 0,6/1 kV
(5 m)
5 G 70 mm² RV-K 0,6/1 kV
(130 m)
Onyx Solar Back-contact
¼ Walkable floor
Onyx Solar Back-contact
¼ Walkable floor
Onyx Solar Back-contact
¼ Walkable floor
Onyx Solar Back-contact
¼ Walkable floor
String 5 - 48 modules
2 x 4 mm² ZZ-F 1,5/1 kV
(45 m)
String 6 - 48 modules
2 x 4 mm² ZZ-F 1,5/1 kV
(57 m)
String 7 - 48 modules
2 x 4 mm² ZZ-F 1,5/1 kV
(48 m)
String 8 - 48 modules
2 x 4 mm² ZZ-F 1,5/1 kV
(60 m)
MPPT 1
MPPT 2
Inverter 3
Huawei Sun2000L-8KTL
5 G 4 mm² RV-K 0,6/1 kV
(5 m)

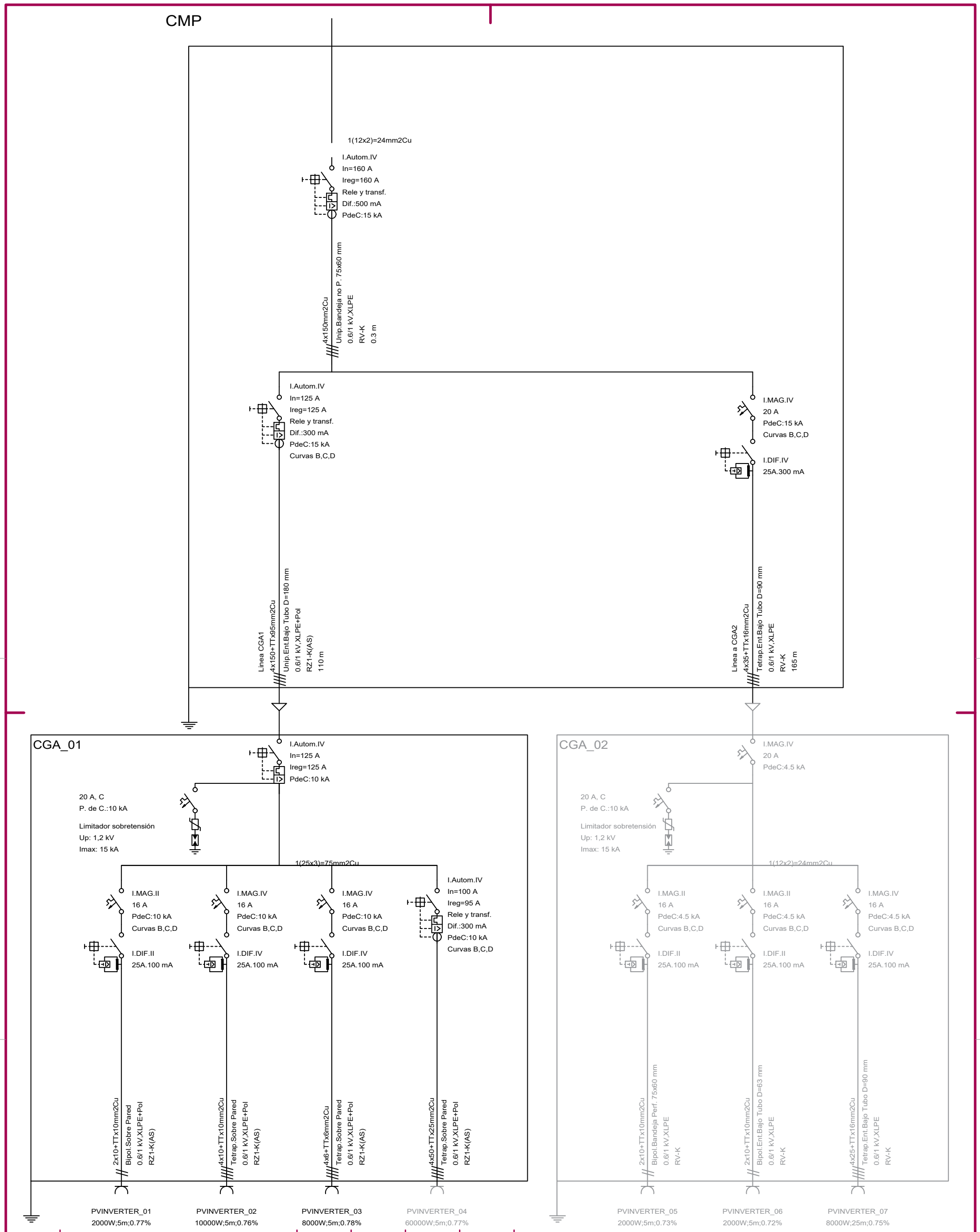

Revisión	Descripción	Realizado	Comprobado	Aprobado	Fecha
0	Creación	O.R.C.	O.R.C	O.R.C.	23/11/2021

Ingeniero autor del Proyecto

Oscar de la Rubia Carretero
Colegiado COIIM 13.594

ISFOC
INSTITUTO DE SISTEMAS FOTOVOLTAICOS DE CONCENTRACIÓN

Cliente

Unidad	Formato	Proyecto	Expediente
N/A	A3	Autoconsumo ISFOC	02P2019
Escala		Plano	Número
N/A		Esquema unifilar CA	I7

Hoja 1 de 1

Plano|07-Esquema_unifilar.dwg

Este documento es propiedad de ISFOC, S.A. Queda estrictamente prohibida su divulgación sin su consentimiento expreso.

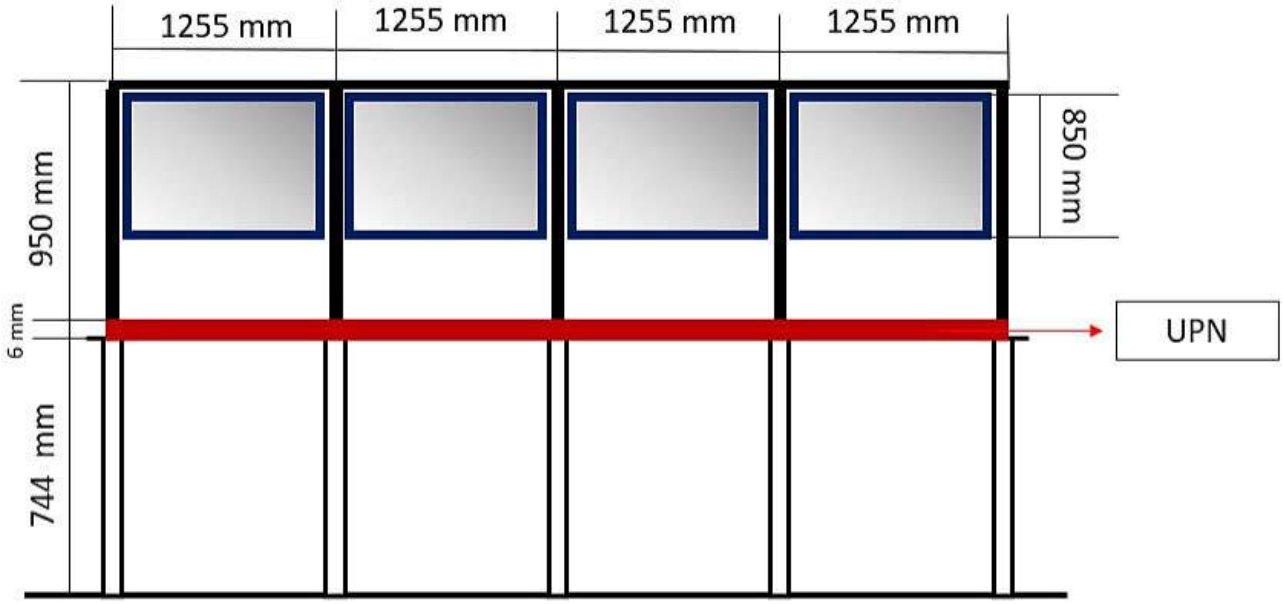
1255 mm
1255 mm
1255 mm
1255 mm
950 mm
850 mm
6 mm
UPN
744 mm

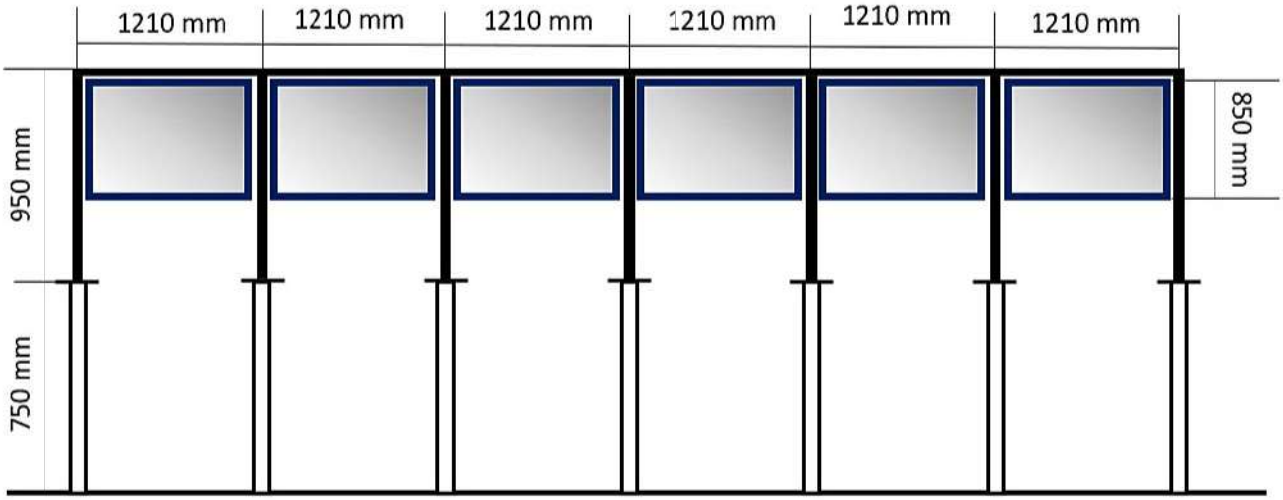
1210 mm
1210 mm
1210 mm
1210 mm
1210 mm
1210 mm
950 mm
850 mm
750 mm

1

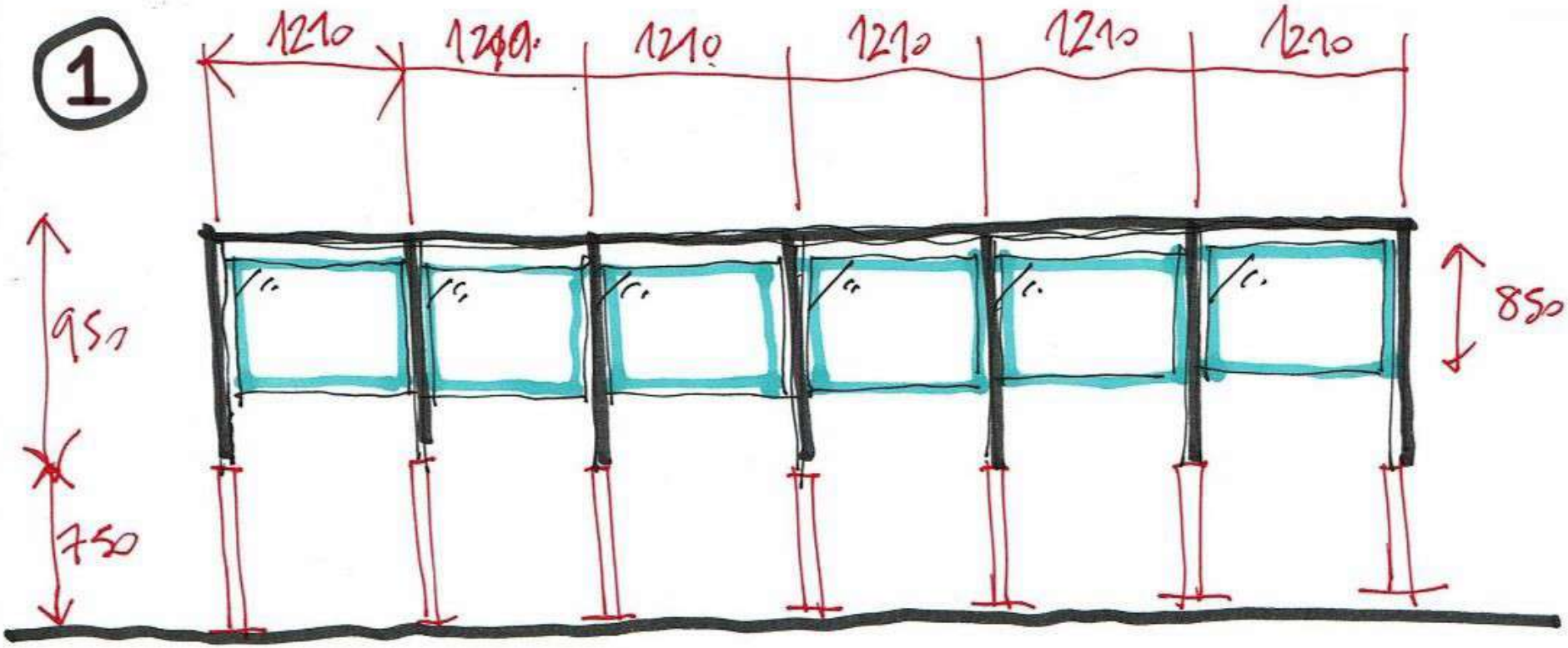
1210
1210
1210
1210
1210
1210
950
750
850

2

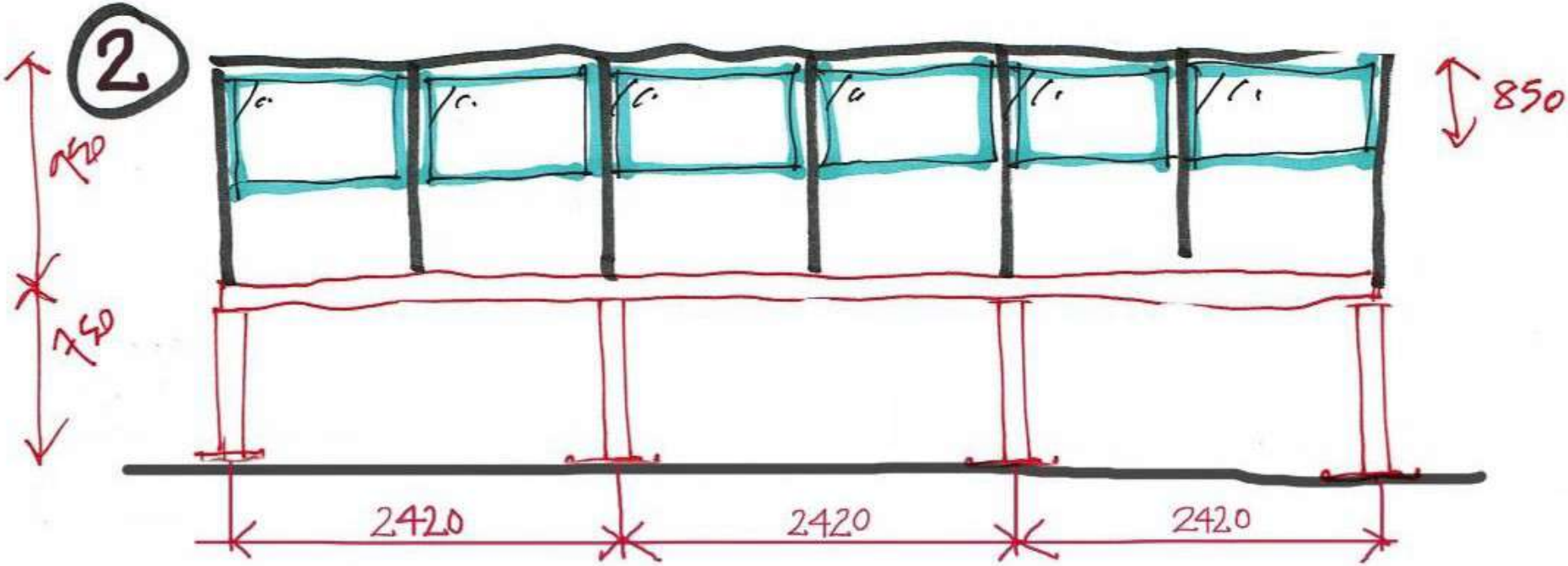
850
750
2420
2420
2420

BARANDILLA

FACHADA SUR

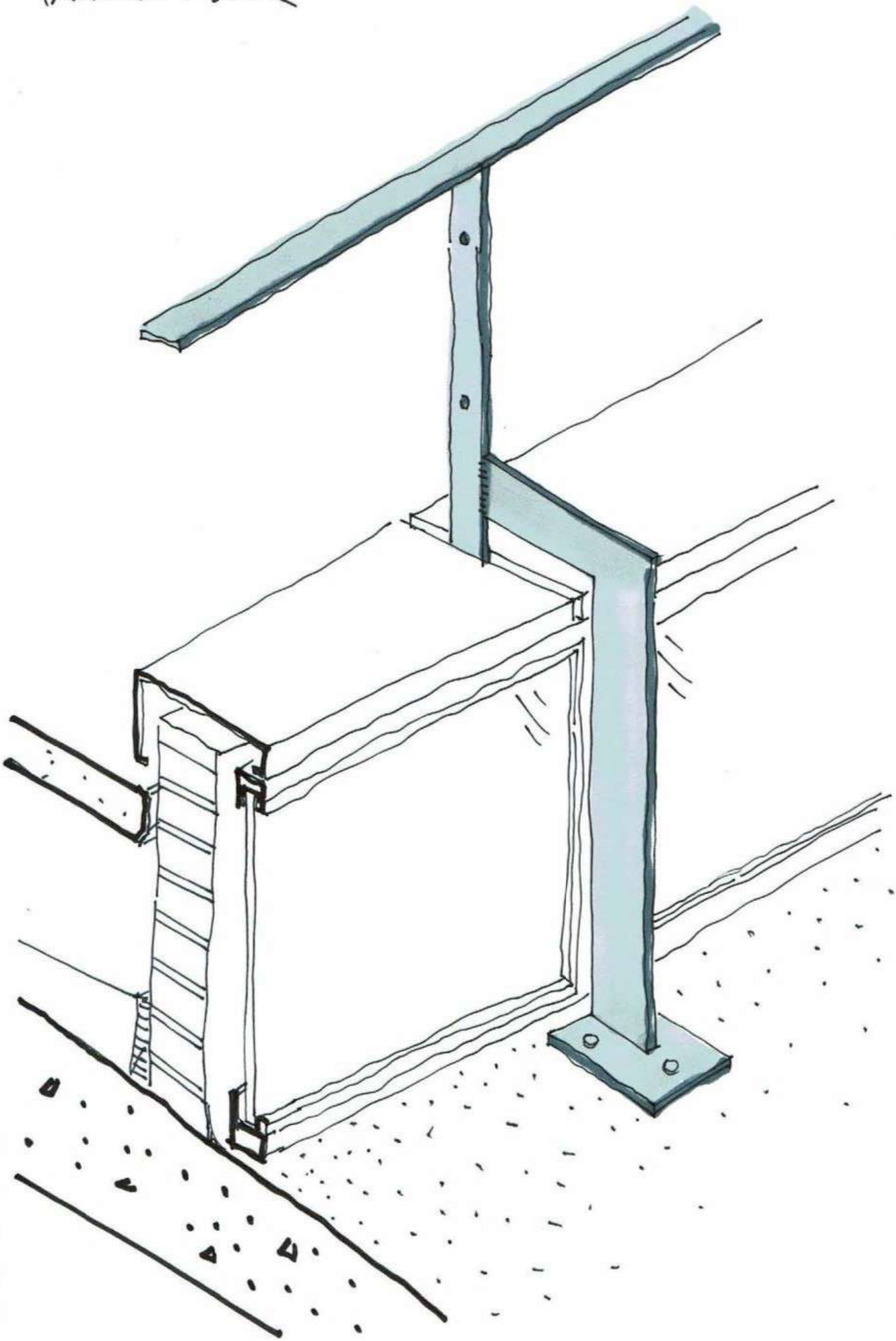

BARANDILLA

FACHADA SUR (JUNTA)

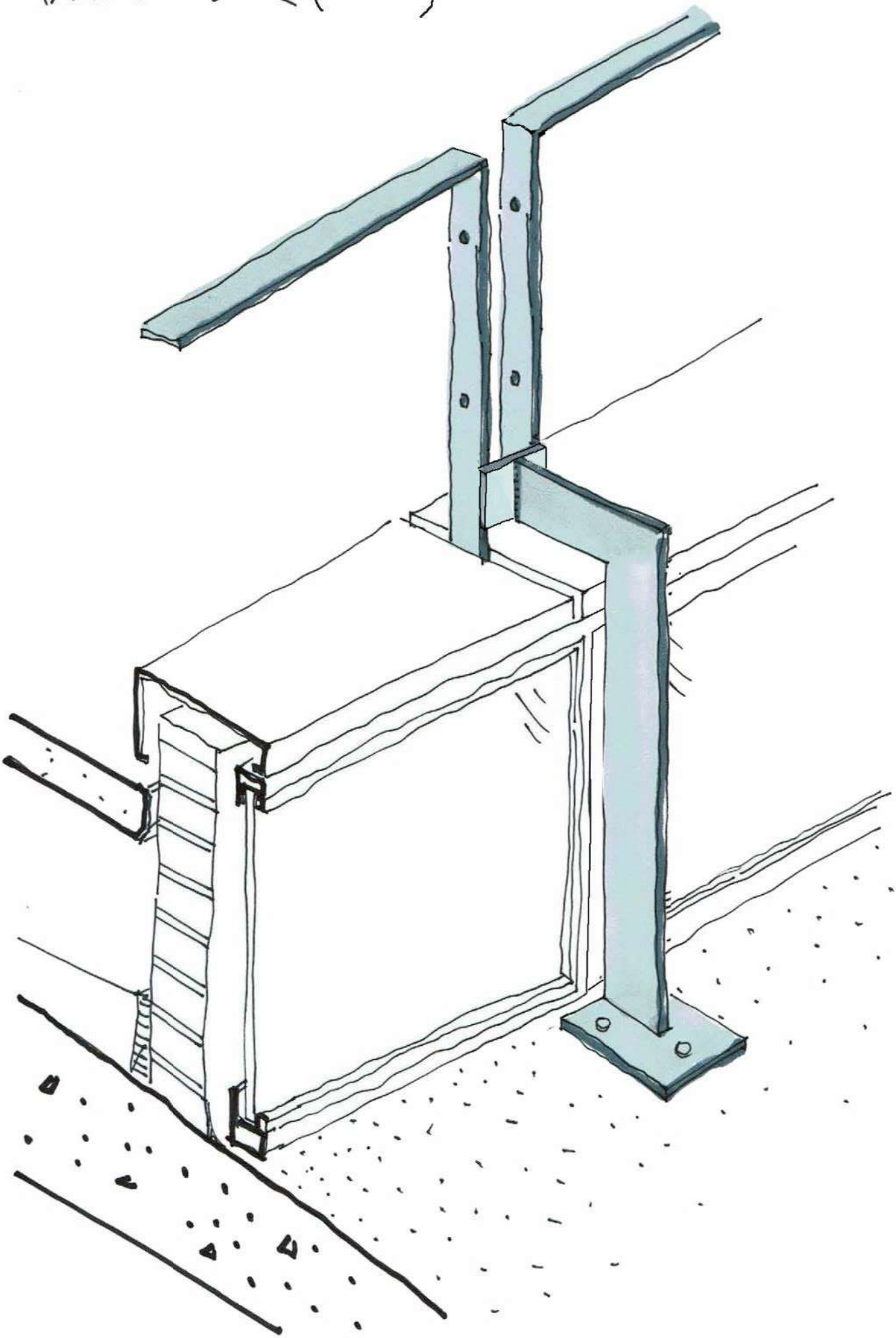

BARANDILLA

FACHADA SUR

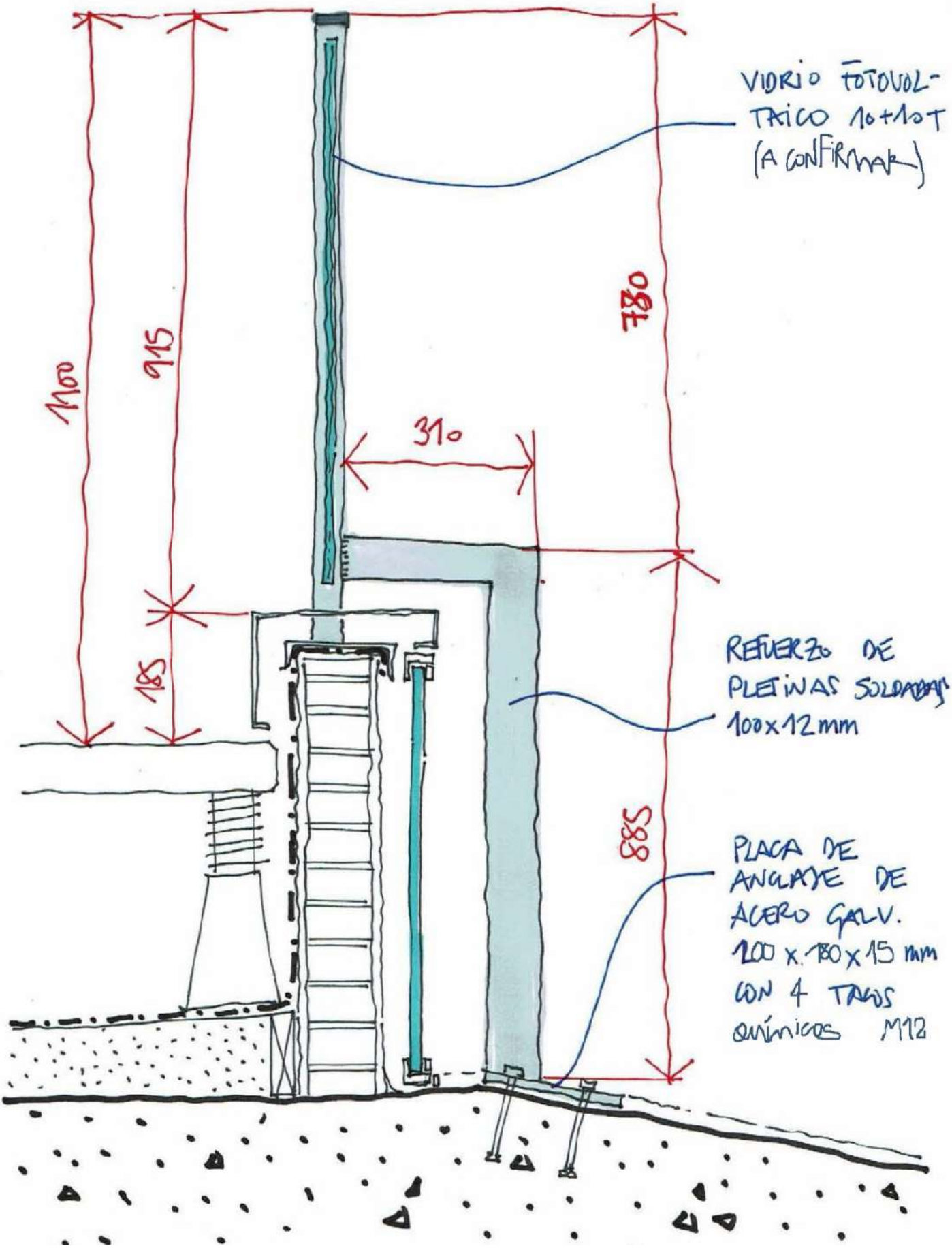

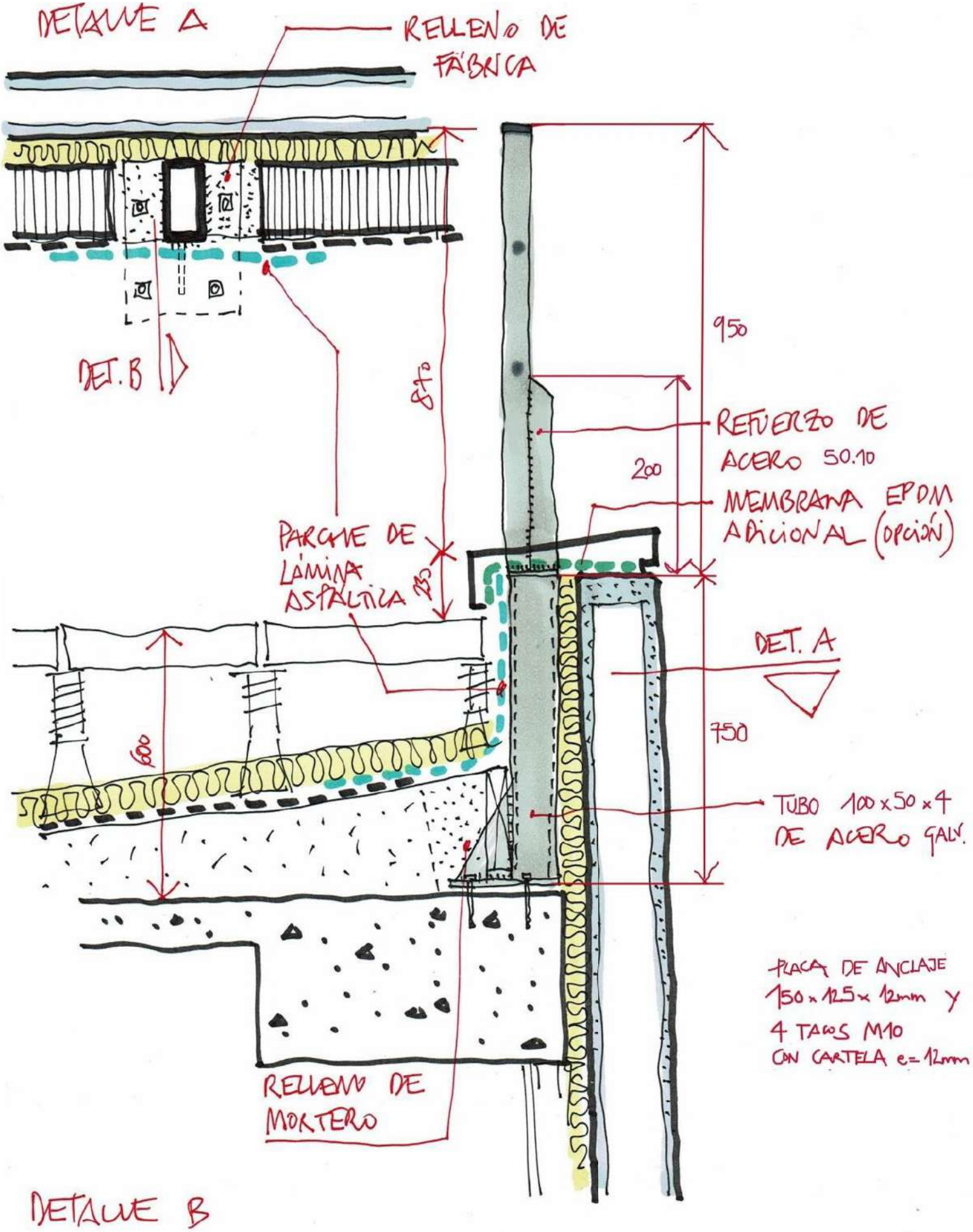
DETALLE A
RELLENO DE FÁBRICA
DET. B
950
RETUERZO DE ACERO 50.10
200
MEMBRANA EPDM ADICIONAL (OPCIÓN)
PARCHE DE LÁMINA ASFÁLTICA
DET. A
750
TUBO 100 x 50 x 4 DE ACERO GALV.
PLACA DE ANCLAJE 150 x 125 x 12mm Y 4 TACOS M10 CON CARTELA e=12mm
RELLENO DE MORTERO
DETALLE B

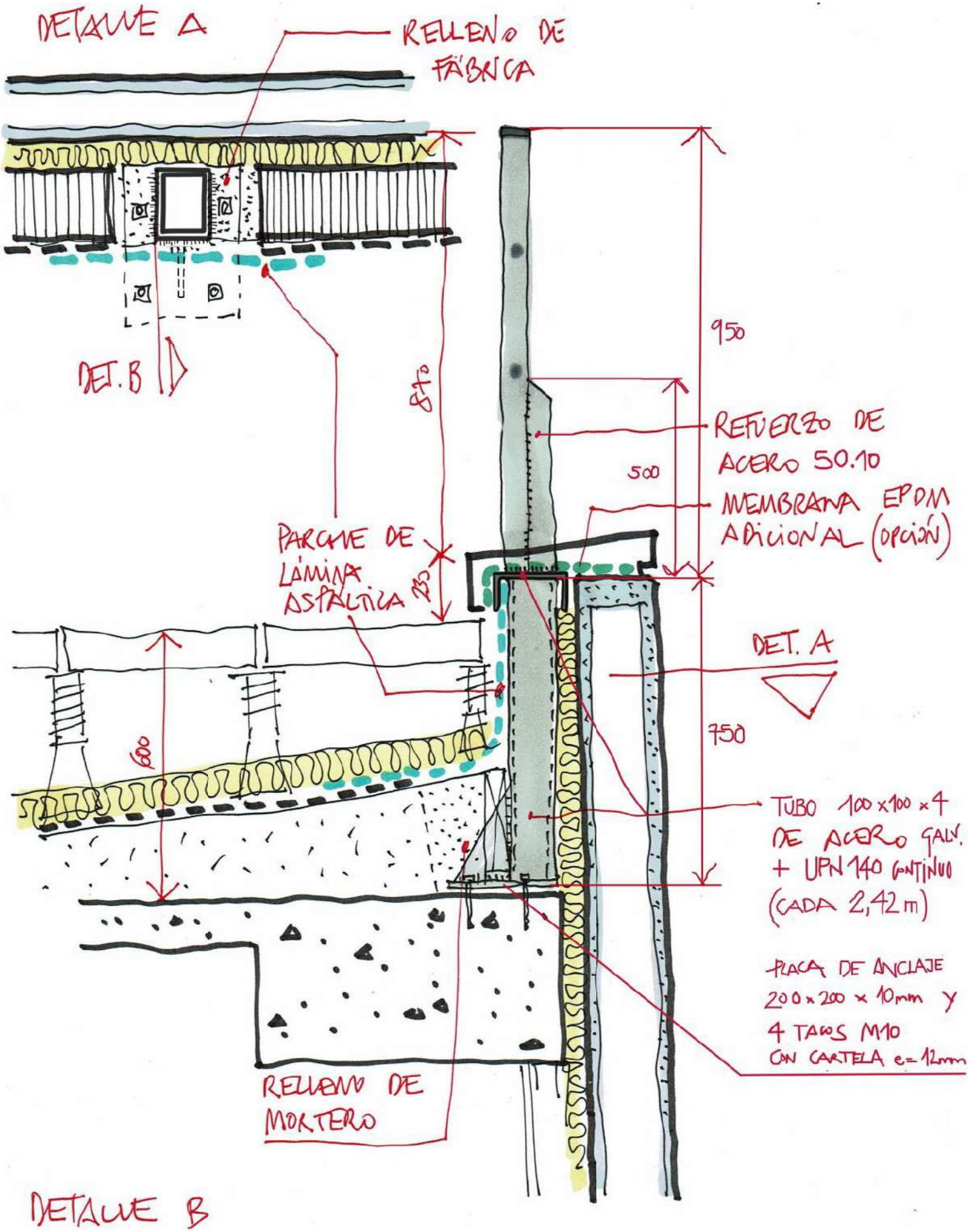
DETALLE A
RELLENO DE FÁBRICA
DET. B
950
500
REFUERZO DE ACERO 50.10
MEMBRANA EPDM ADICIONAL (OPCIÓN)
PARCHE DE LÁMINA ASFÁLTICA
DET. A
750
TUBO 100 x 100 x 4 DE ACERO GALV. + UPN 140 CONTINUO (CADA 2,42 m)
PLACA DE ANCLAJE 200 x 200 x 10mm Y 4 TACOS M10 CON CARTELA e=12mm
RELLENO DE MORTERO
DETALLE B

BARANDILLA

FIJACIÓN DE VIDRIO

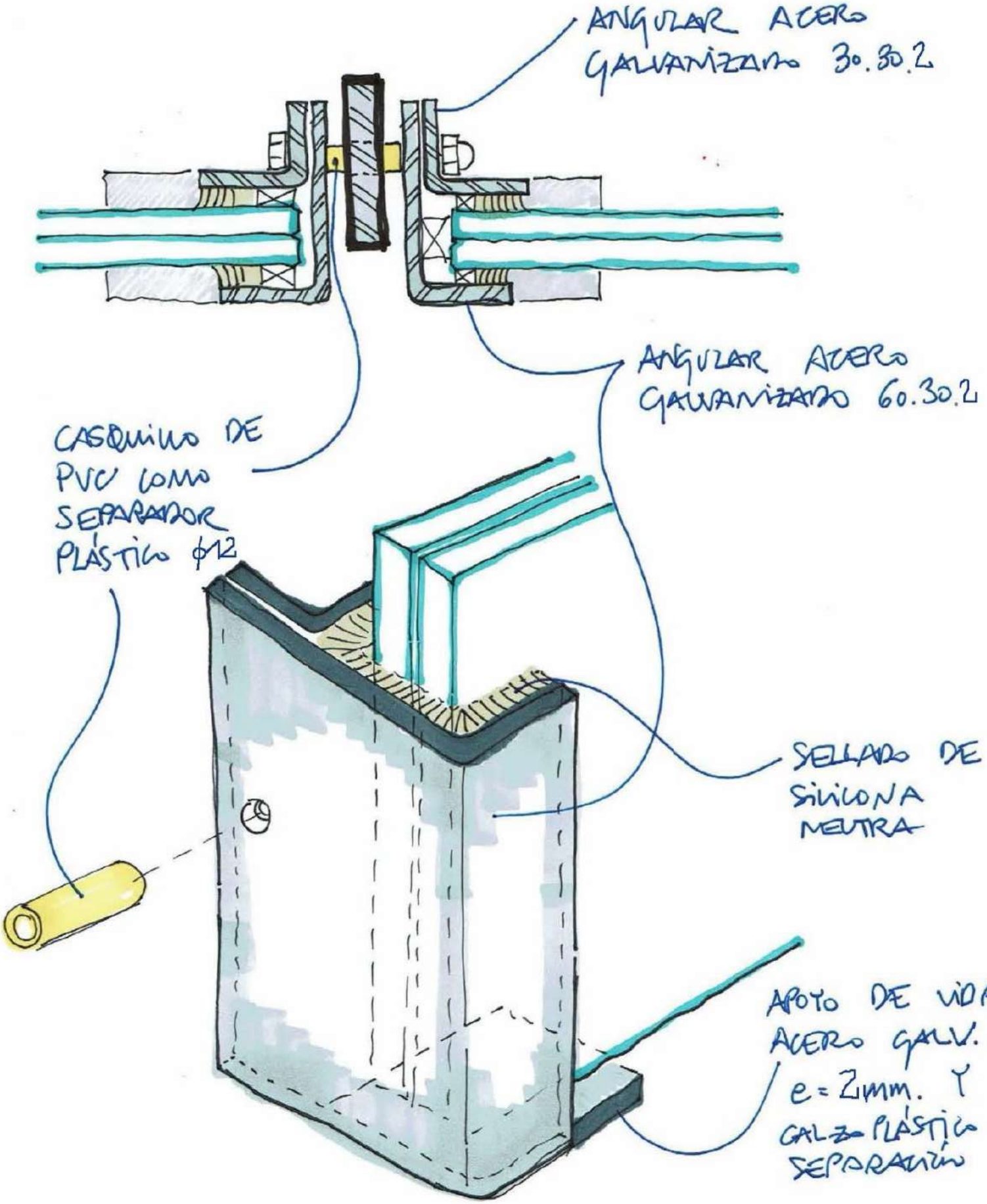

SUELO PISABLE

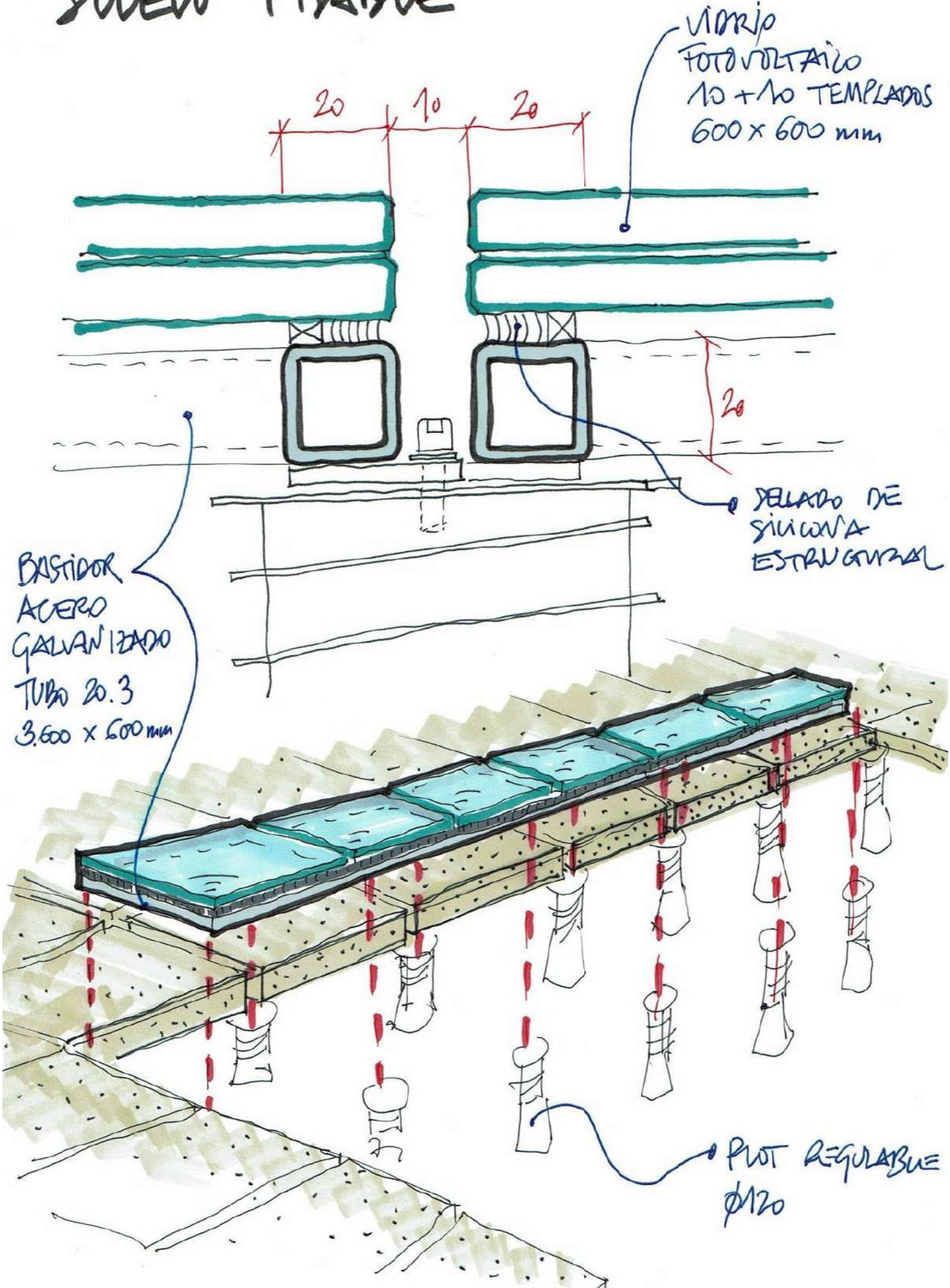

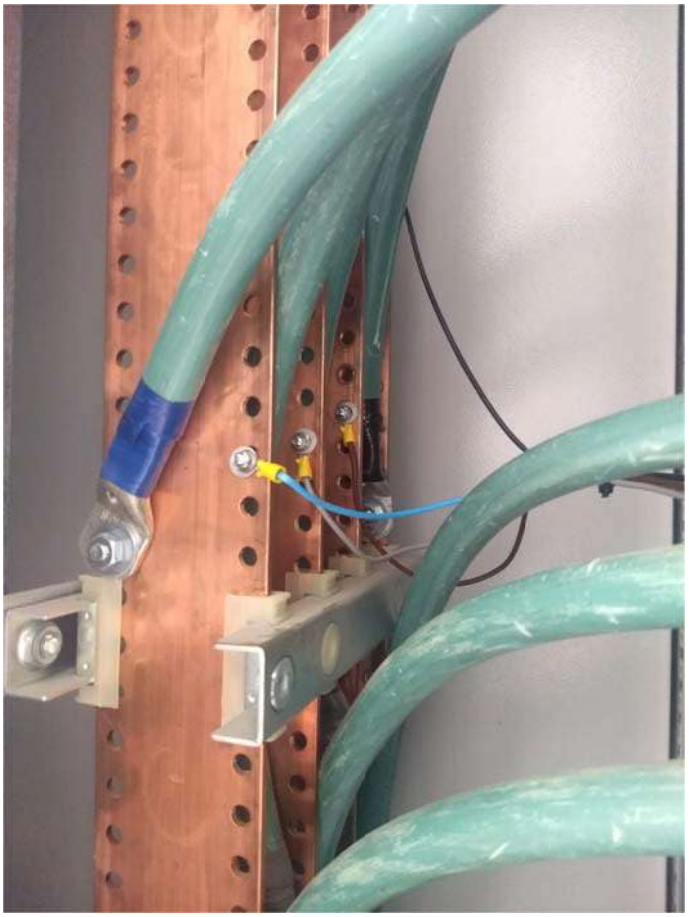

Janitza
UMG 604-PRO
N L1 L2 L3
-869
W
iskra
RI64
C10
C10
C10
iskra
RI62
C2

OUT 1A
4000A OVERLOAD
2000A LOAD ?
1000A ERROR 1
500A ERROR 2
250A ERROR 3
PROG TxD
ERROR RxD
RogoTrans
PROG
ALARM 24V
OUT 1A
4000A OVERLOAD
2000A LOAD ?
1000A ERROR 1
500A ERROR 2
250A ERROR 3
PROG TxD
ERROR RxD
RogoTrans
PROG
ALARM 24V
OUT 1A
4000A OVERLOAD
2000A LOAD ?
1000A ERROR 1
500A ERROR 2
250A ERROR 3
PROG TxD
ERROR RxD
RogoTrans
PROG
ALARM 24V

Janiteza
Janiteza
Janiteza
LEONI